Robust optimization problems in structural mechanics

Jérémy Bleyer

Laboratoire Navier, ENPC, Univ Gustave Eiffel, CNRS

coll. Vincent Leclère (CERMICS)

Workshop on robust and stochastic optimization methods
November, 19th 2021

Limit state design methods in civil engineering

Variability: material properties, loading conditions, boundary conditions, initial state, etc.

Design codes: use of **partial safety coefficients** on loading amplitude and material strength to guard against uncertainty

Limit state design methods in civil engineering

semi-analytical methods: loading and material properties are known, one must find a **critical collapse mechanism**

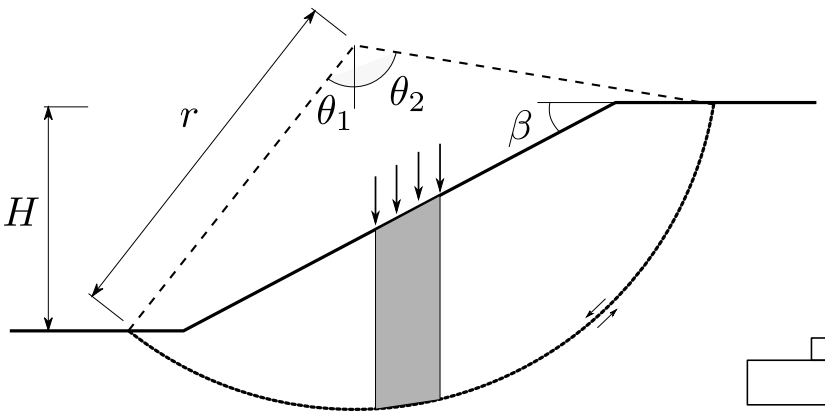

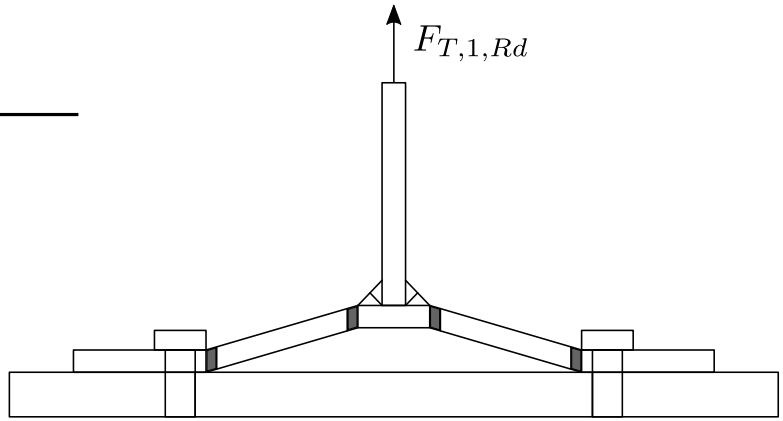

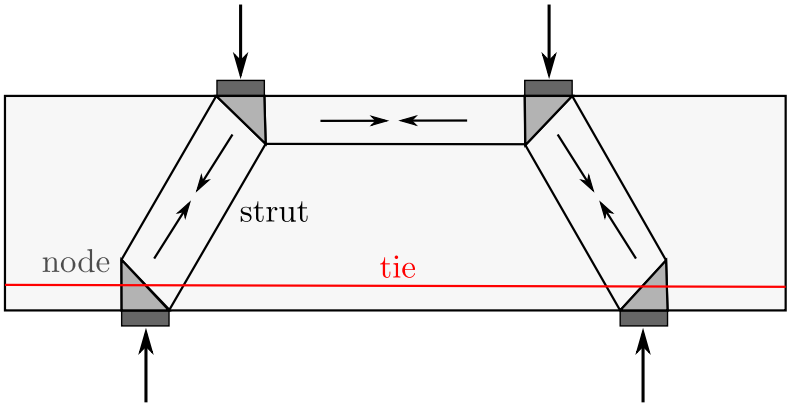

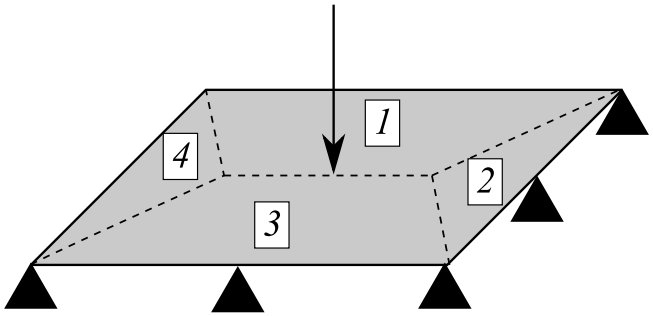

Limit state design methods in civil engineering

semi-analytical methods: loading and material properties are known, one must find a **critical collapse mechanism**

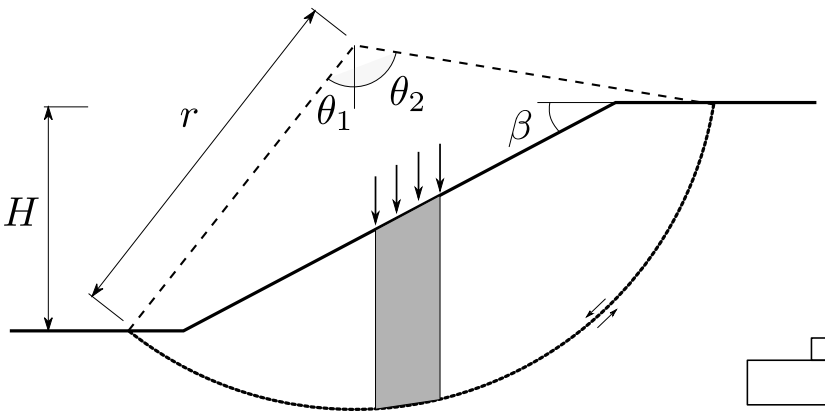

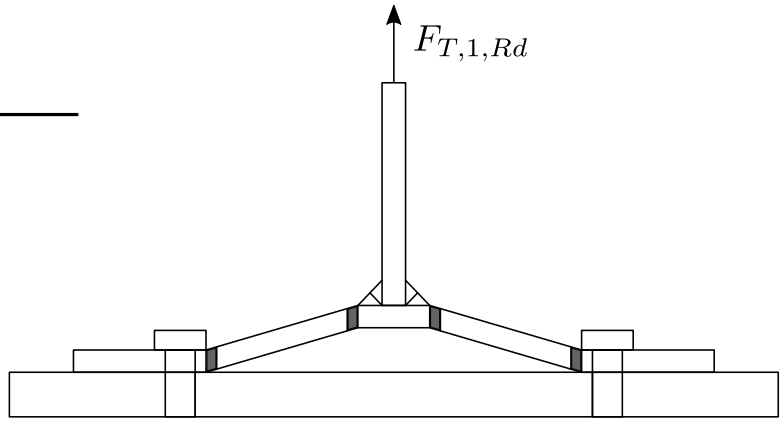

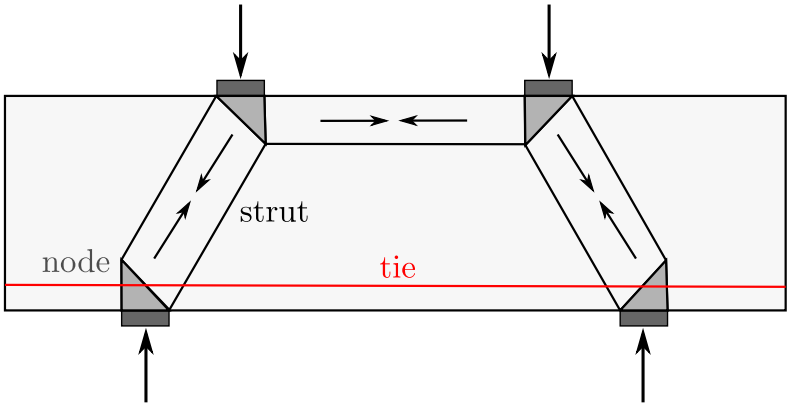

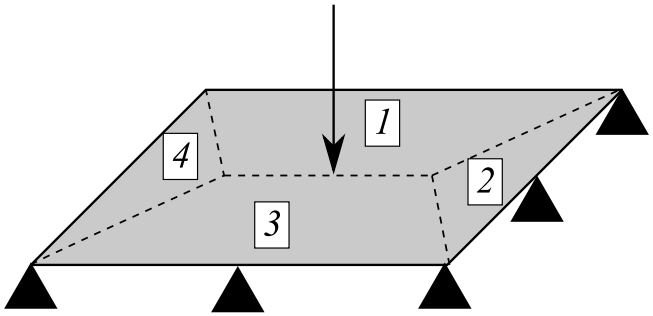

limit analysis theory: a tool to estimate a structure collapse load using convex optimization

Outline

1. **Limit analysis theory: nominal and uncertain cases**
2. Static counterpart and tractable strength condition reformulations
3. Affinely adjustable robust counterpart
4. Uncertain loadings

Limit analysis theory: a convex optimization formulation

Collapse = there exist no **internal stress field** satsifying both **equilibrium** and **strength** conditions

Limit analysis theory: a convex optimization formulation

Collapse = there exist no **internal stress field** satsifying both **equilibrium** and **strength** conditions

- **Stress field**: a symmetric 2nd-rank tensor $\boldsymbol{\sigma}(\boldsymbol{x})$ for 2D/3D solids

Limit analysis theory: a convex optimization formulation

Collapse = there exist no **internal stress field** satsifying both **equilibrium** and **strength** conditions

- **Stress field**: a symmetric 2nd-rank tensor $\boldsymbol{\sigma}(\boldsymbol{x})$ for 2D/3D solids
- **Equilibrium**: a linear differential equation with respect to a given loading

$$\operatorname{div} \boldsymbol{\sigma}(\boldsymbol{x}) + \lambda \boldsymbol{f}(\boldsymbol{x}) = 0 \quad \text{for } \boldsymbol{x} \in \Omega$$

Limit analysis theory: a convex optimization formulation

Collapse = there exist no **internal stress field** satsifying both **equilibrium** and **strength** conditions

- **Stress field**: a symmetric 2nd-rank tensor $\boldsymbol{\sigma}(\boldsymbol{x})$ for 2D/3D solids
- **Equilibrium**: a linear differential equation with respect to a given loading

$$\operatorname{div} \boldsymbol{\sigma}(\boldsymbol{x}) + \lambda \boldsymbol{f}(\boldsymbol{x}) = 0 \quad \text{for } \boldsymbol{x} \in \Omega$$

- **Strength condition**: G **convex** set containing 0

$$\begin{aligned} & \boldsymbol{\sigma}(\boldsymbol{x}) \in G(\boldsymbol{x}) \quad \forall \boldsymbol{x} \in \Omega \\ \Leftrightarrow \quad & g_G(\boldsymbol{\sigma}(\boldsymbol{x})) \leq 1 \end{aligned}$$

g_G Minkowski functional (gauge) of G

Limit analysis theory: a convex optimization formulation

Collapse = there exist no **internal stress field** satsifying both **equilibrium** and **strength** conditions

- **Stress field**: a symmetric 2nd-rank tensor $\boldsymbol{\sigma}(\boldsymbol{x})$ for 2D/3D solids
- **Equilibrium**: a linear differential equation with respect to a given loading

$$\operatorname{div} \boldsymbol{\sigma}(\boldsymbol{x}) + \lambda \boldsymbol{f}(\boldsymbol{x}) = 0 \quad \text{for } \boldsymbol{x} \in \Omega$$

- **Strength condition**: G **convex** set containing 0

$$\begin{aligned} & \boldsymbol{\sigma}(\boldsymbol{x}) \in G(\boldsymbol{x}) \quad \forall \boldsymbol{x} \in \Omega \\ \Leftrightarrow \quad & g_G(\boldsymbol{\sigma}(\boldsymbol{x})) \leq 1 \end{aligned}$$

g_G Minkowski functional (gauge) of G

Limit analysis theory: a convex optimization formulation

Collapse = there exist no **internal stress field** satsifying both **equilibrium** and **strength** conditions

- **Stress field**: a symmetric 2nd-rank tensor $\boldsymbol{\sigma}(\boldsymbol{x})$ for 2D/3D solids
- **Equilibrium**: a linear differential equation with respect to a given loading

$$\operatorname{div} \boldsymbol{\sigma}(\boldsymbol{x}) + \lambda \boldsymbol{f}(\boldsymbol{x}) = 0 \quad \text{for } \boldsymbol{x} \in \Omega$$

- **Strength condition**: G **convex** set containing 0

$$\begin{aligned} & \boldsymbol{\sigma}(\boldsymbol{x}) \in G(\boldsymbol{x}) \quad \forall \boldsymbol{x} \in \Omega \\ \Leftrightarrow \quad & g_G(\boldsymbol{\sigma}(\boldsymbol{x})) \leq 1 \end{aligned}$$

g_G Minkowski functional (gauge) of G

Collapse load

Find the **maximum** load multiplier λ such that such a stress field exists

Convex optimization formulation : nominal case

Continuous problem:

$$\lambda^+ = \max_{\lambda, \boldsymbol{\sigma} \in \mathcal{W}} \quad \lambda$$

$$\text{s.t.} \quad \begin{array}{ll} \operatorname{div} \boldsymbol{\sigma} + \lambda \boldsymbol{f} = 0 & \forall \boldsymbol{x} \in \Omega \\ g_G(\boldsymbol{\sigma}) \leq 1 & \end{array}$$

Convex optimization formulation : nominal case

Continuous problem:

$$\lambda^+ = \max_{\lambda, \boldsymbol{\sigma} \in \mathcal{W}} \quad \lambda$$
$$\text{s.t.} \quad \begin{array}{ll} \operatorname{div} \boldsymbol{\sigma} + \lambda \boldsymbol{f} = 0 & \forall \boldsymbol{x} \in \Omega \\ g_G(\boldsymbol{\sigma}) \leq 1 & \end{array}$$

Discrete (e.g. finite-element) formulation:

$$\lambda^+ = \max_{\lambda, \boldsymbol{\sigma} \in \mathcal{W}_h} \quad \lambda$$
$$\text{s.t.} \quad \begin{array}{ll} \boldsymbol{H}\boldsymbol{\sigma} + \lambda \boldsymbol{F} = 0 & \\ g_G(\boldsymbol{\sigma}_k) \leq 1 & \forall k = 1, \ldots, N \end{array}$$

convex optimization problems

Convex optimization formulation : nominal case

Continuous problem:

$$\lambda^+ = \max_{\lambda, \boldsymbol{\sigma} \in \mathcal{W}} \quad \lambda$$
$$\text{s.t.} \quad \begin{array}{ll} \operatorname{div} \boldsymbol{\sigma} + \lambda \boldsymbol{f} = 0 & \forall \boldsymbol{x} \in \Omega \\ g_G(\boldsymbol{\sigma}) \leq 1 & \end{array}$$

Discrete (e.g. finite-element) formulation:

$$\lambda^+ = \max_{\lambda, \boldsymbol{\sigma} \in \mathcal{W}_h} \quad \lambda$$
$$\text{s.t.} \quad \begin{array}{ll} \boldsymbol{H}\boldsymbol{\sigma} + \lambda \boldsymbol{F} = 0 & \\ g_G(\boldsymbol{\sigma}_k) \leq 1 & \forall k = 1, \ldots, N \end{array}$$

convex optimization problems
usually G (thus also g_G) has a simple geometrical shape: ellipsoid, cone, etc.
$\Rightarrow$ **conic programming solvers** e.g. `MOSEK`, `ECOS`, etc.

Examples

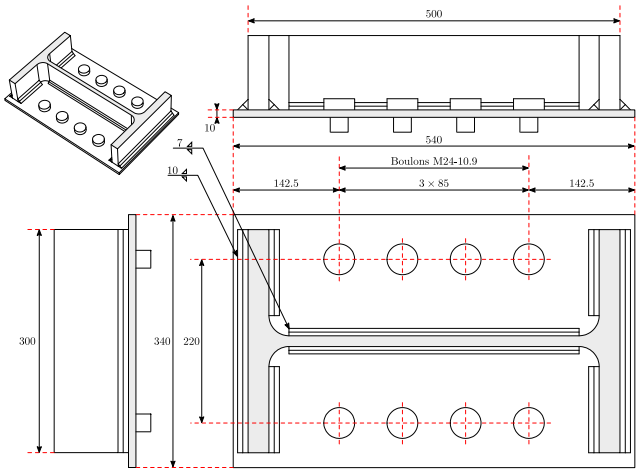
500
10
7
10
540
Boulons M24-10.9
142.5
3 × 85
142.5
300
340
220

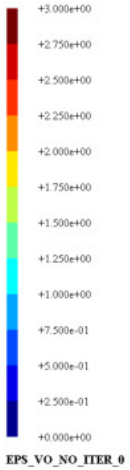
+3.000e+00
+2.750e+00
+2.500e+00
+2.250e+00
+2.000e+00
+1.750e+00
+1.500e+00
+1.250e+00
+1.000e+00
+7.500e-01
+5.000e-01
+2.500e-01
+0.000e+00
EPS_VO_NO_ITER_0

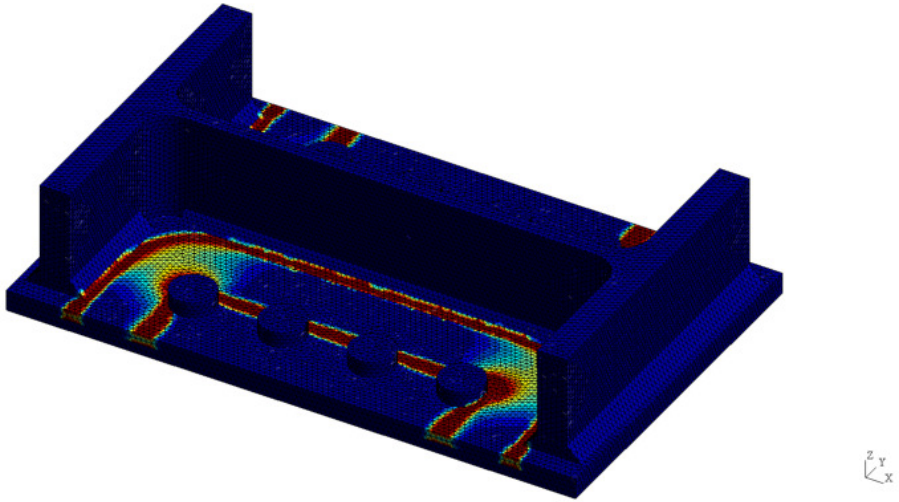

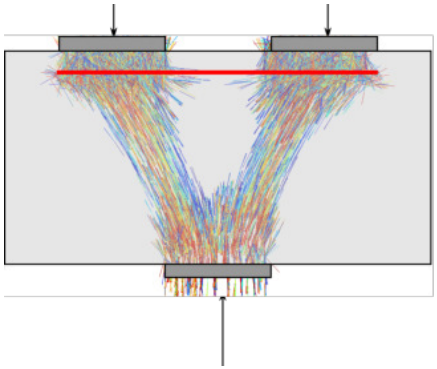

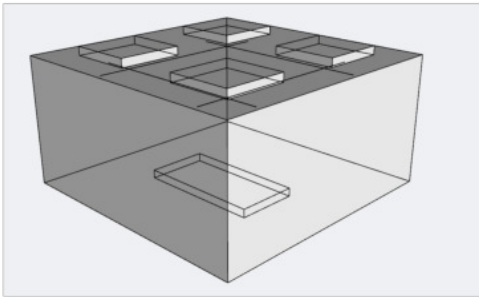

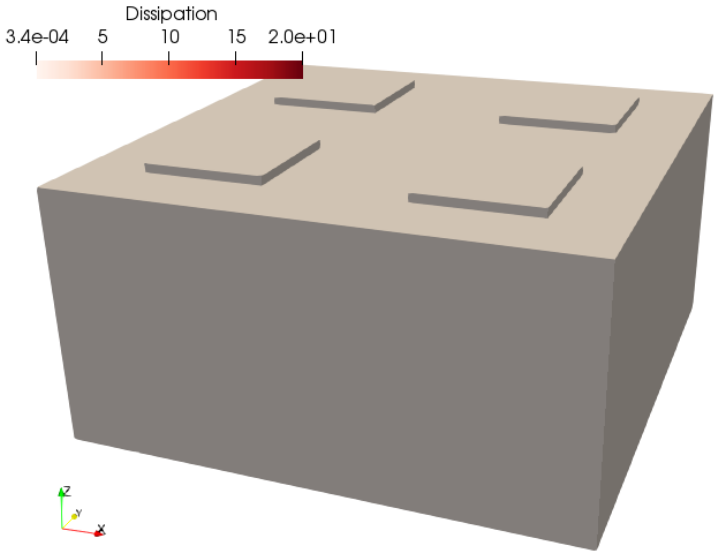
Dissipation
3.4e-04
5
10
15
2.0e+01

Uncertain limit analysis

Uncertain **material strength** and/or **loading**

$$\lambda^+(\boldsymbol{\zeta}) = \max_{\lambda,\boldsymbol{\sigma}} \quad \lambda$$
$$\text{s.t.} \quad \begin{array}{ll} \boldsymbol{H}\boldsymbol{\sigma} + \lambda \boldsymbol{F}(\boldsymbol{\zeta}) = 0 & \\ g_{G(\boldsymbol{\zeta})}(\boldsymbol{\sigma}_k) \leq 1 & \forall k = 1, \ldots, N \end{array}$$

geometry is deterministic $\Rightarrow$ **fixed recourse** equilibrium matrix $\boldsymbol{H}$

Uncertain limit analysis

Uncertain **material strength** and/or **loading**

$$\lambda^+(\zeta) = \max_{\lambda,\boldsymbol{\sigma}} \quad \lambda$$
$$\text{s.t.} \quad \begin{array}{ll} \boldsymbol{H}\boldsymbol{\sigma} + \lambda \boldsymbol{F}(\zeta) = 0 & \\ g_{G(\zeta)}(\boldsymbol{\sigma}_k) \leq 1 & \forall k = 1, \ldots, N \end{array}$$

geometry is deterministic $\Rightarrow$ **fixed recourse** equilibrium matrix $\boldsymbol{H}$

Robust optimization formulation

$\mathcal{U}$ a given uncertainty set. Find the worst-case limit load:

$$\lambda_{\text{wc}} = \min_{\zeta \in \mathcal{U}} \max_{\lambda,\boldsymbol{\sigma}} \quad \lambda$$
$$\text{s.t.} \quad \begin{array}{ll} \boldsymbol{H}\boldsymbol{\sigma} + \lambda \boldsymbol{F}(\zeta) = 0 & \\ g_{G(\zeta)}(\boldsymbol{\sigma}_k) \leq 1 & \forall k = 1, \ldots, N \end{array}$$

Outline

1 Limit analysis theory: nominal and uncertain cases

2 Static counterpart and tractable strength condition reformulations

3 Affinely adjustable robust counterpart

4 Uncertain loadings

Adjustable or static formulations ?

Loading uncertainty: load factor and stress variables are naturally **adjustable** variables
Strength uncertainty: depends on the shape and amplitude of the uncertainty

Adjustable or static formulations ?

Loading uncertainty: load factor and stress variables are naturally **adjustable** variables
Strength uncertainty: depends on the shape and amplitude of the uncertainty
Static robust counterpart:

$$\begin{aligned} \lambda_{\mathrm{RC}} = \max_{\lambda,\boldsymbol{\sigma}} \min_{\boldsymbol{\zeta}\in\mathcal{U}} \quad & \lambda \\ \text{s.t.} \quad & \boldsymbol{H}\boldsymbol{\sigma} + \lambda \boldsymbol{F} = 0 \\ & g_{G(\boldsymbol{\zeta})}(\boldsymbol{\sigma}_k) \leq 1 \qquad \forall \boldsymbol{\zeta} \in \mathcal{U},\ \forall k = 1, \ldots, N \end{aligned} \tag{RC}$$

Adjustable or static formulations ?

Loading uncertainty: load factor and stress variables are naturally **adjustable** variables
Strength uncertainty: depends on the shape and amplitude of the uncertainty
Static robust counterpart:

$$\lambda_{\mathrm{RC}} = \max_{\lambda,\boldsymbol{\sigma}} \min_{\boldsymbol{\zeta}\in\mathcal{U}} \quad \lambda \qquad \text{(RC)}$$
$$\text{s.t.} \quad \begin{aligned} &\boldsymbol{H}\boldsymbol{\sigma} + \lambda \boldsymbol{F} = 0 \\ &g_{G(\boldsymbol{\zeta})}(\boldsymbol{\sigma}_k) \leq 1 \qquad \forall \boldsymbol{\zeta} \in \mathcal{U},\ \forall k = 1, \ldots, N \end{aligned}$$

we can replace the uncertain strength condition with a **deterministic** condition:

$$\begin{aligned} \Leftrightarrow \quad & g_{G(\boldsymbol{\zeta})}(\boldsymbol{\sigma}_k) \leq 1 \quad \forall \boldsymbol{\zeta} \in \mathcal{U} \\ \Leftrightarrow \quad & \boldsymbol{\sigma}_k \in G(\boldsymbol{\zeta}) \quad \forall \boldsymbol{\zeta} \in \mathcal{U} \\ & \boldsymbol{\sigma}_k \in G_{\mathrm{RC}} := \bigcap_{\boldsymbol{\zeta}\in\mathcal{U}} G(\boldsymbol{\zeta}) \end{aligned}$$

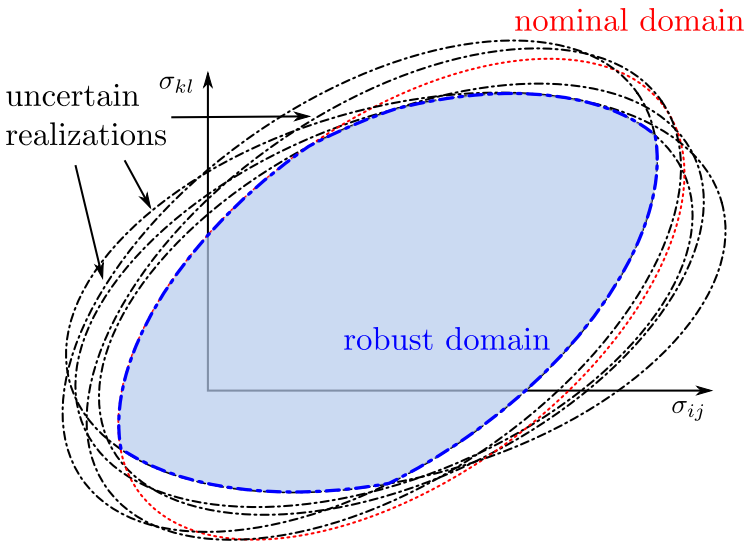

Uncertain strength conditions

Tractability of (RC) if one has a tractable conic formulation for G_{RC}

Uncertain strength conditions

Tractability of (RC) if one has a tractable conic formulation for G_{RC}

- homothetic uncertainty

$$G(\zeta) = \beta(\zeta) G_0 \Rightarrow G_{\mathrm{RC}} = \beta_{\min} G_0$$

where $\beta_{\min} := \min_{\zeta \in \mathcal{U}} \beta(\zeta)$

- $g(\boldsymbol{\sigma}; \zeta) = h(\boldsymbol{A}(\zeta)\boldsymbol{\sigma})$ with h convex for a small amplitude uncertainty

$$g(\boldsymbol{\sigma}; \zeta) \approx h((\boldsymbol{A}_0 + \boldsymbol{A}_0' \zeta)\boldsymbol{\sigma}) \leq 1, \quad \forall \zeta \in \mathcal{U}$$

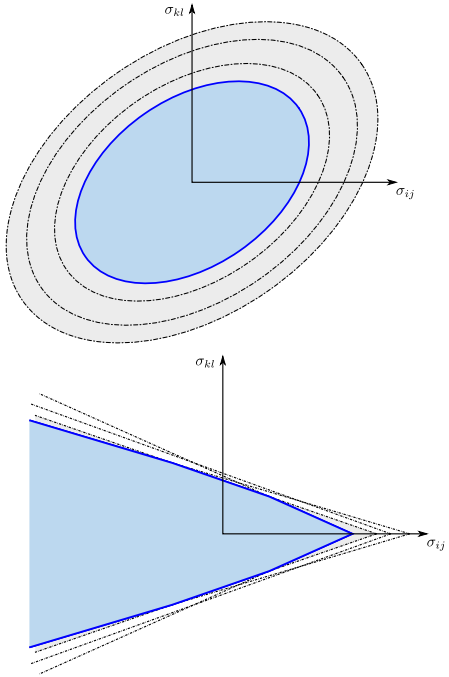

Uncertain strength conditions

Tractability of (RC) if one has a tractable conic formulation for G_{RC}

- homothetic uncertainty

$$G(\zeta) = \beta(\zeta) G_0 \Rightarrow G_{\mathrm{RC}} = \beta_{\min} G_0$$

where $\beta_{\min} := \min_{\zeta \in \mathcal{U}} \beta(\zeta)$

- $g(\boldsymbol{\sigma}; \zeta) = h(\boldsymbol{A}(\zeta)\boldsymbol{\sigma})$ with h convex for a small amplitude uncertainty

$$g(\boldsymbol{\sigma}; \zeta) \approx h((\boldsymbol{A}_0 + \boldsymbol{A}_0' \zeta)\boldsymbol{\sigma}) \leq 1, \quad \forall \zeta \in \mathcal{U}$$

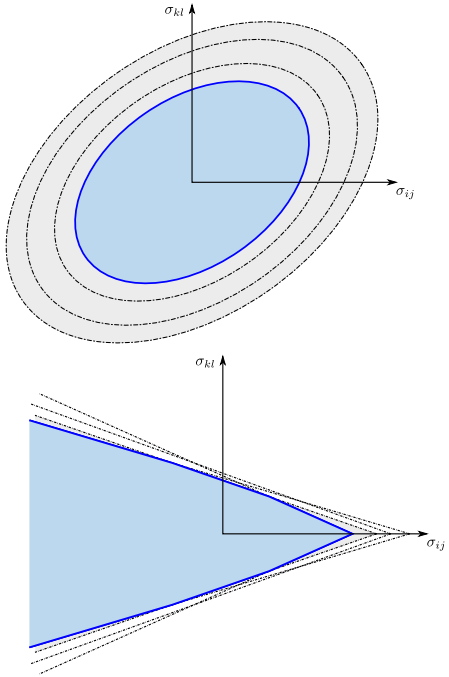

A generic question

Tractable strength constraint reformulation of:

$$g(\boldsymbol{\sigma} + \boldsymbol{\Sigma}\zeta) \leq 1, \quad \forall \zeta \in \mathcal{U} \tag{1}$$

for a known $\boldsymbol{\Sigma}$? (note: convex in both $\boldsymbol{\sigma}$ and ζ)

Exact reformulations

$$g(\boldsymbol{\sigma} + \boldsymbol{\Sigma}\boldsymbol{\zeta}) \leq 1, \quad \forall \boldsymbol{\zeta} \in \mathcal{U}$$

exact reformulations can be obtained in the following cases:

Exact reformulations

$$g(\boldsymbol{\sigma} + \boldsymbol{\Sigma}\boldsymbol{\zeta}) \leq 1, \quad \forall \boldsymbol{\zeta} \in \mathcal{U}$$

exact reformulations can be obtained in the following cases:

- G is **polyhedral** : $G = \{\boldsymbol{\sigma} \text{ s.t. } \boldsymbol{c}_k^\mathsf{T}\boldsymbol{\sigma} \leq d_k, \quad \forall k = 1, \ldots, K\}$

$$\begin{aligned} & \boldsymbol{c}_k^\mathsf{T}\boldsymbol{\sigma} + \boldsymbol{c}_k^\mathsf{T}\boldsymbol{\Sigma}\boldsymbol{\zeta} \leq d_k \quad \forall \boldsymbol{\zeta} \in \mathcal{U} \\ \Leftrightarrow \quad & \boldsymbol{c}_k^\mathsf{T}\boldsymbol{\sigma} + \underbrace{\max_{\boldsymbol{\zeta} \in \mathcal{U}} \{(\boldsymbol{c}_k^\mathsf{T}\boldsymbol{\Sigma})\boldsymbol{\zeta}\}}_{:= \|\boldsymbol{\Sigma}^\mathsf{T}\boldsymbol{c}_k\|_{\mathcal{U},*}} \leq d_k \end{aligned}$$

Exact reformulations

$$g(\boldsymbol{\sigma} + \boldsymbol{\Sigma}\boldsymbol{\zeta}) \leq 1, \quad \forall \boldsymbol{\zeta} \in \mathcal{U}$$

exact reformulations can be obtained in the following cases:

- G is **polyhedral** : $G = \{\boldsymbol{\sigma} \text{ s.t. } \boldsymbol{c}_k^\mathsf{T}\boldsymbol{\sigma} \leq d_k, \quad \forall k = 1, \ldots, K\}$

$$\begin{aligned} & \boldsymbol{c}_k^\mathsf{T}\boldsymbol{\sigma} + \boldsymbol{c}_k^\mathsf{T}\boldsymbol{\Sigma}\boldsymbol{\zeta} \leq d_k \quad \forall \boldsymbol{\zeta} \in \mathcal{U} \\ \Leftrightarrow \quad & \boldsymbol{c}_k^\mathsf{T}\boldsymbol{\sigma} + \underbrace{\max_{\boldsymbol{\zeta} \in \mathcal{U}} \{(\boldsymbol{c}_k^\mathsf{T}\boldsymbol{\Sigma})\boldsymbol{\zeta}\}}_{:= \|\boldsymbol{\Sigma}^\mathsf{T}\boldsymbol{c}_k\|_{\mathcal{U},*}} \leq d_k \end{aligned}$$

- $\mathcal{U}$ is **polyhedral** : $\mathcal{U} = \text{conv}\{\boldsymbol{\zeta}_1, \ldots, \boldsymbol{\zeta}_N\}$ of vertices $\boldsymbol{\zeta}_k$:

$$\begin{aligned} & g(\boldsymbol{\sigma} + \boldsymbol{\Sigma}\boldsymbol{\zeta}) \leq 1, \quad \forall \boldsymbol{\zeta} \in \mathcal{U} \\ \Leftrightarrow & g(\boldsymbol{\sigma} + \boldsymbol{\Sigma}\boldsymbol{\zeta}_k) \leq 1, \quad \forall k = 1, \ldots, N \end{aligned}$$

impractical problem size in general

Approximate reformulations

We look for **tractable and safe approximations** in the generic case:

Approximate reformulations

We look for **tractable and safe approximations** in the generic case:

- [Bertsimas and Sim, 2004] : if $\mathcal{U}$ is defined by an absolute norm, then

$$g(\boldsymbol{\sigma}) + \|\boldsymbol{s}\|_{\mathcal{U},*} \leq 1 \tag{2}$$
$$\text{where } s_j = \max\{g(\boldsymbol{\Sigma}_j), g(-\boldsymbol{\Sigma}_j)\}$$

is a safe approximation of (1).

Approximate reformulations

We look for **tractable and safe approximations** in the generic case:

- [Bertsimas and Sim, 2004] : if $\mathcal{U}$ is defined by an absolute norm, then

$$g(\boldsymbol{\sigma}) + \|\boldsymbol{s}\|_{\mathcal{U},*} \leq 1 \qquad (2)$$
$$\text{where } s_j = \max\{g(\boldsymbol{\Sigma}_j), g(-\boldsymbol{\Sigma}_j)\}$$

  is a safe approximation of (1).

- [Roos et al., 2018] : for a **polyhedral uncertainty** set $\mathcal{U} = \{\boldsymbol{\zeta} \in \mathbb{R}^m \text{ s.t. } \exists \boldsymbol{\xi} \in \mathbb{R}^q \text{ and } \mathrm{D}_1\boldsymbol{\zeta} + \mathrm{D}_2\boldsymbol{\xi} \leq \mathrm{d}\}$ with $\mathrm{D}_1 \in \mathbb{R}^{r\times m}, \mathrm{D}_2 \in \mathbb{R}^{r\times q}$, $d \in \mathbb{R}^r$

$$\exists \boldsymbol{v} \in \mathbb{R}^r,\ \boldsymbol{V} \in \mathbb{R}^{d\times r} \text{ s.t. } \begin{cases} g\left(\boldsymbol{\sigma} - \boldsymbol{V}\boldsymbol{d}\right) + \boldsymbol{d}^{\mathsf{T}}\boldsymbol{v} \leq 1 \\ g(\boldsymbol{V}_i) \leq v_i \quad \forall i = 1, \ldots, r \\ \boldsymbol{D}_1^{\mathsf{T}}\boldsymbol{v} = \boldsymbol{b} \\ \boldsymbol{D}_2^{\mathsf{T}}\boldsymbol{v} = 0 \\ \boldsymbol{V}\boldsymbol{D}_1 + \boldsymbol{\Sigma} = 0 \\ \boldsymbol{V}\boldsymbol{D}_2 = 0 \end{cases} \qquad (3)$$

  is a safe approximation of (1). It is tighter than (2).

Illustrative example in 2D

Nominal strength condition: **von Mises**, uniaxial tensile strength σ_0

$$g(\boldsymbol{\sigma}) = \frac{1}{\sigma_0}\sqrt{\sigma_1^2 + \sigma_2^2 - \sigma_1\sigma_2} \leq 1$$

Illustrative example in 2D

Nominal strength condition: **von Mises**, uniaxial tensile strength σ_0

$$g(\boldsymbol{\sigma}) = \frac{1}{\sigma_0}\sqrt{\sigma_1^2 + \sigma_2^2 - \sigma_1\sigma_2} \leq 1$$

Robust strength condition for $\boldsymbol{\Sigma} = \alpha\sigma_0 \boldsymbol{I}_2$:

$$G_{\mathrm{RC}} = \{\boldsymbol{\sigma} \text{ s.t. } g(\boldsymbol{\sigma} + \alpha\sigma_0\boldsymbol{\zeta}) \leq 1, \quad \forall \boldsymbol{\zeta} \in \mathcal{U}_p\}$$

with $\mathcal{U}_p$ the unit L_p-ball.

Illustrative example in 2D

Nominal strength condition: **von Mises**, uniaxial tensile strength σ_0

$$g(\boldsymbol{\sigma}) = \frac{1}{\sigma_0}\sqrt{\sigma_1^2 + \sigma_2^2 - \sigma_1\sigma_2} \leq 1$$

Robust strength condition for $\boldsymbol{\Sigma} = \alpha\sigma_0 \boldsymbol{I}_2$:

$$G_{\mathrm{RC}} = \{\boldsymbol{\sigma} \text{ s.t. } g(\boldsymbol{\sigma} + \alpha\sigma_0\boldsymbol{\zeta}) \leq 1, \quad \forall \boldsymbol{\zeta} \in \mathcal{U}_p\}$$

with $\mathcal{U}_p$ the unit L_p-ball.

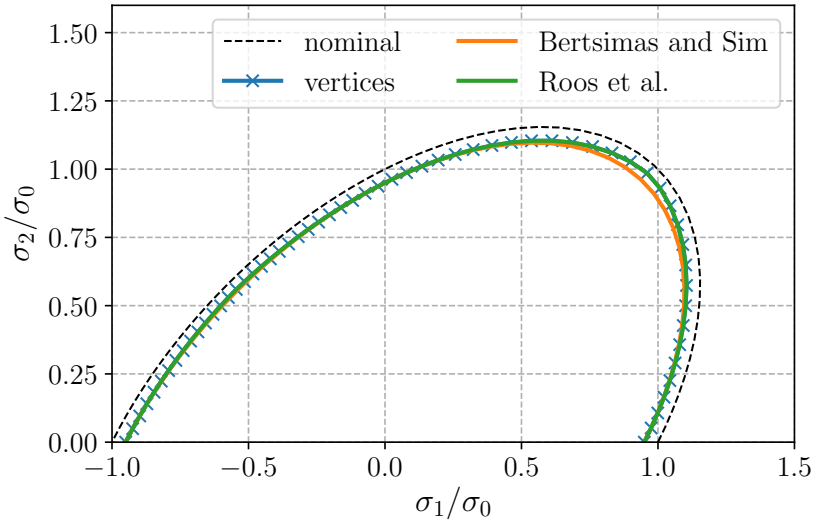

(a) $\mathcal{U}_1$ (L_1-ball)

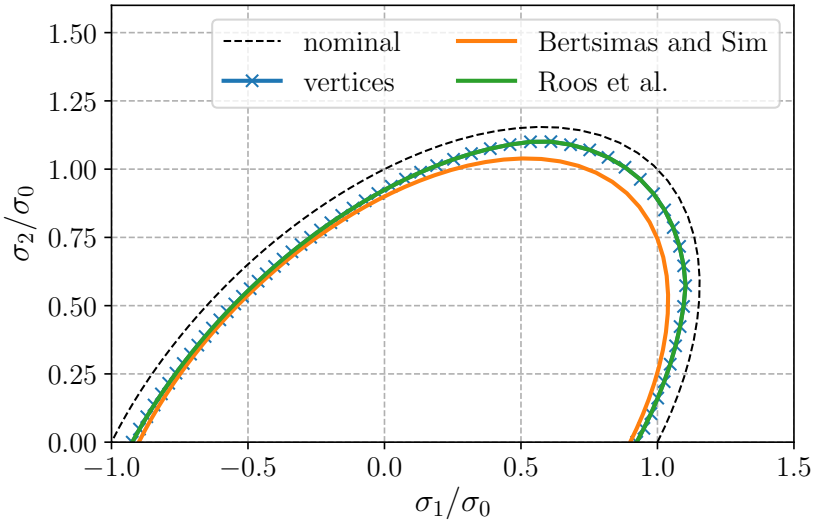

(b) $\mathcal{U}_\infty$ (L_∞-ball)

$\alpha = 0.05$

Illustrative example in 2D

Nominal strength condition: **von Mises**, uniaxial tensile strength σ_0

$$g(\boldsymbol{\sigma}) = \frac{1}{\sigma_0}\sqrt{\sigma_1^2 + \sigma_2^2 - \sigma_1\sigma_2} \leq 1$$

Robust strength condition for $\boldsymbol{\Sigma} = \alpha\sigma_0 \boldsymbol{I}_2$:

$$G_{\mathrm{RC}} = \{\boldsymbol{\sigma} \text{ s.t. } g(\boldsymbol{\sigma} + \alpha\sigma_0\boldsymbol{\zeta}) \leq 1, \quad \forall \boldsymbol{\zeta} \in \mathcal{U}_p\}$$

with $\mathcal{U}_p$ the unit L_p-ball.

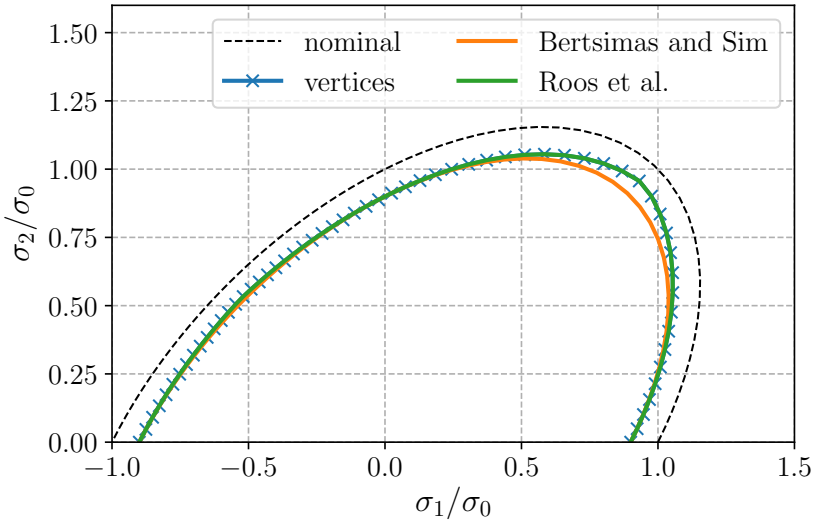

(a) $\mathcal{U}_1$ (L_1-ball)

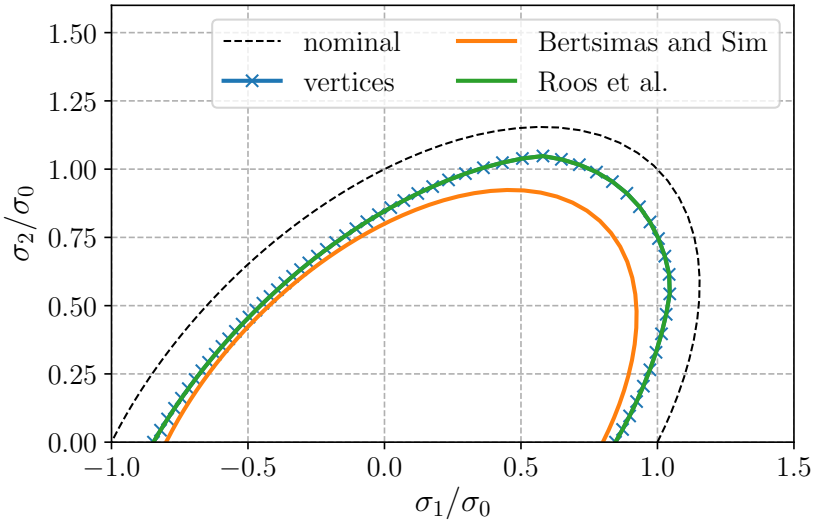

(b) $\mathcal{U}_\infty$ (L_∞-ball)

$\alpha = 0.10$

Illustrative example in 2D

Nominal strength condition: **von Mises**, uniaxial tensile strength σ_0

$$g(\boldsymbol{\sigma}) = \frac{1}{\sigma_0}\sqrt{\sigma_1^2 + \sigma_2^2 - \sigma_1\sigma_2} \leq 1$$

Robust strength condition for $\boldsymbol{\Sigma} = \alpha\sigma_0 \boldsymbol{I}_2$:

$$G_{\mathrm{RC}} = \{\boldsymbol{\sigma} \text{ s.t. } g(\boldsymbol{\sigma} + \alpha\sigma_0\boldsymbol{\zeta}) \leq 1, \quad \forall \boldsymbol{\zeta} \in \mathcal{U}_p\}$$

with $\mathcal{U}_p$ the unit L_p-ball.

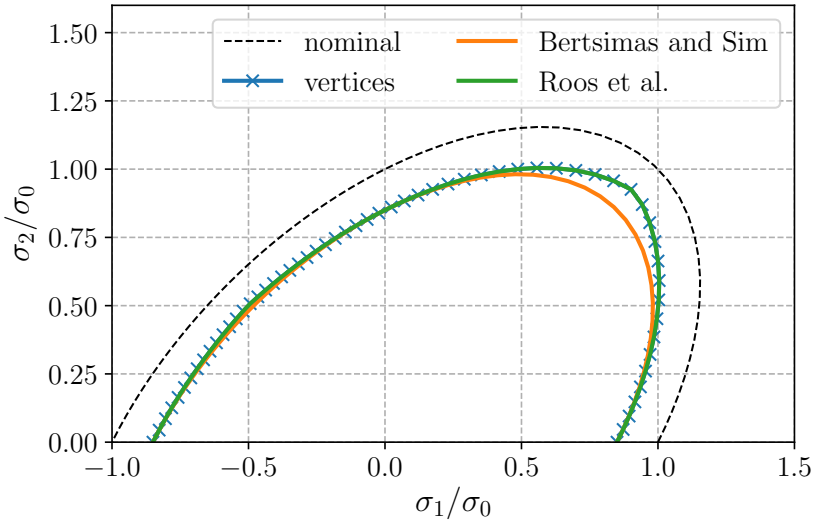

(a) $\mathcal{U}_1$ (L_1-ball)

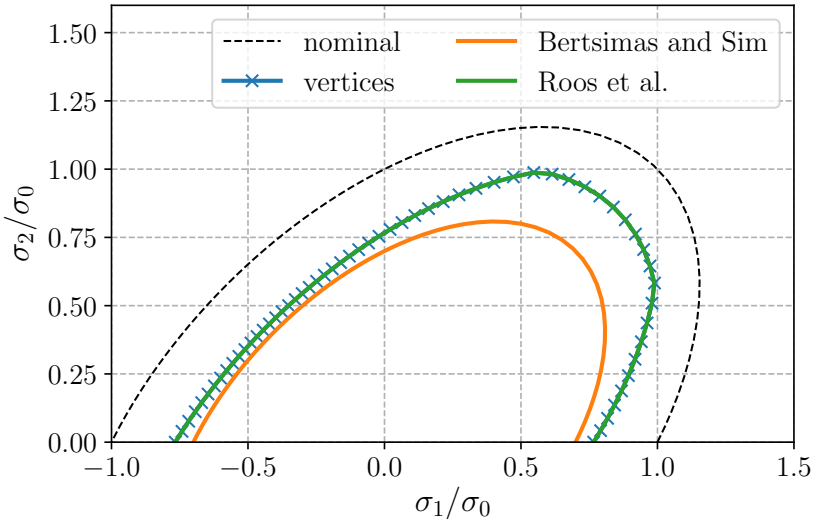

(b) $\mathcal{U}_\infty$ (L_∞-ball)

$\alpha = 0.15$

Illustrative example in 2D

Nominal strength condition: **von Mises**, uniaxial tensile strength σ_0

$$g(\boldsymbol{\sigma}) = \frac{1}{\sigma_0}\sqrt{\sigma_1^2 + \sigma_2^2 - \sigma_1\sigma_2} \leq 1$$

Robust strength condition for $\boldsymbol{\Sigma} = \alpha\sigma_0 \boldsymbol{I}_2$:

$$G_{\mathrm{RC}} = \{\boldsymbol{\sigma} \text{ s.t. } g(\boldsymbol{\sigma} + \alpha\sigma_0\boldsymbol{\zeta}) \leq 1, \quad \forall \boldsymbol{\zeta} \in \mathcal{U}_p\}$$

with $\mathcal{U}_p$ the unit L_p-ball.

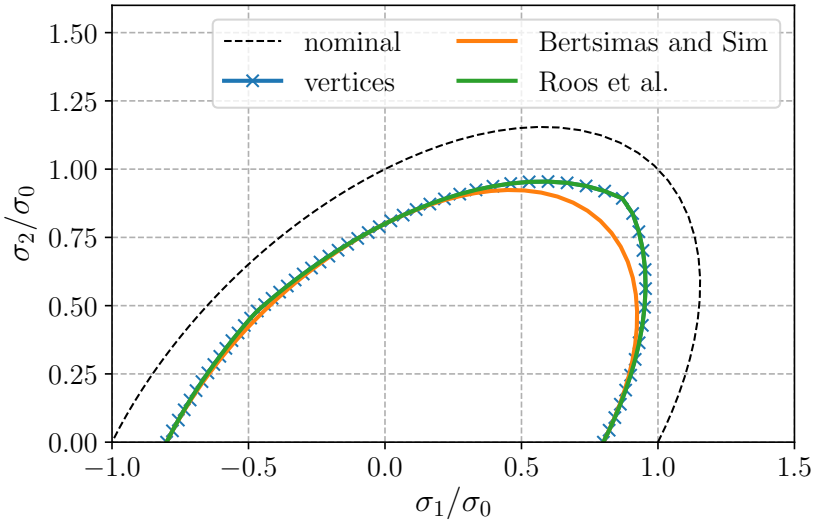

(a) $\mathcal{U}_1$ (L_1-ball)

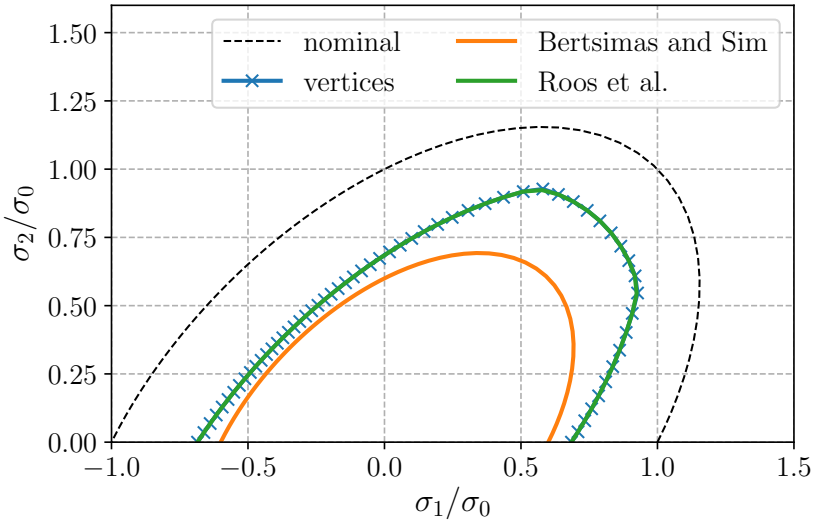

(b) $\mathcal{U}_\infty$ (L_∞-ball)

$\alpha = 0.20$

Illustrative example in 2D

Nominal strength condition: **von Mises**, uniaxial tensile strength σ_0

$$g(\boldsymbol{\sigma}) = \frac{1}{\sigma_0}\sqrt{\sigma_1^2 + \sigma_2^2 - \sigma_1\sigma_2} \leq 1$$

Robust strength condition for $\boldsymbol{\Sigma} = \alpha\sigma_0 \boldsymbol{I}_2$:

$$G_{\mathrm{RC}} = \{\boldsymbol{\sigma} \text{ s.t. } g(\boldsymbol{\sigma} + \alpha\sigma_0\boldsymbol{\zeta}) \leq 1, \quad \forall \boldsymbol{\zeta} \in \mathcal{U}_p\}$$

with $\mathcal{U}_p$ the unit L_p-ball.

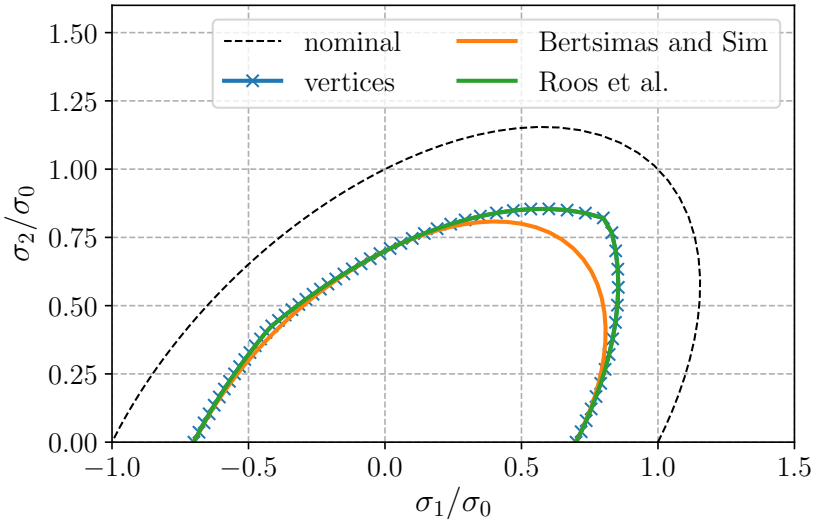

(a) $\mathcal{U}_1$ (L_1-ball)

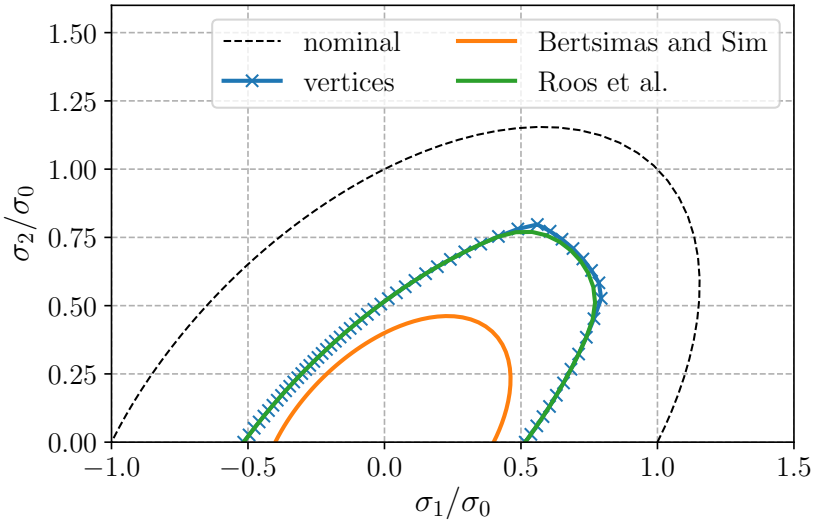

(b) $\mathcal{U}_\infty$ (L_∞-ball)

$\alpha = 0.30$

Illustrative example in 2D

Nominal strength condition: **von Mises**, uniaxial tensile strength σ_0

$$g(\boldsymbol{\sigma}) = \frac{1}{\sigma_0}\sqrt{\sigma_1^2 + \sigma_2^2 - \sigma_1\sigma_2} \leq 1$$

Robust strength condition for $\boldsymbol{\Sigma} = \alpha\sigma_0 \boldsymbol{I}_2$:

$$G_{\mathrm{RC}} = \{\boldsymbol{\sigma} \text{ s.t. } g(\boldsymbol{\sigma} + \alpha\sigma_0\boldsymbol{\zeta}) \leq 1, \quad \forall \boldsymbol{\zeta} \in \mathcal{U}_p\}$$

with $\mathcal{U}_p$ the unit L_p-ball.

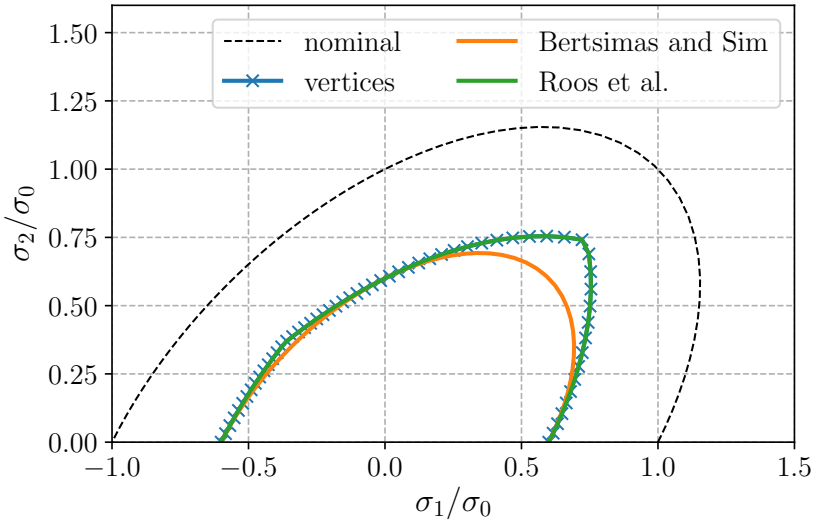

(a) $\mathcal{U}_1$ (L_1-ball)

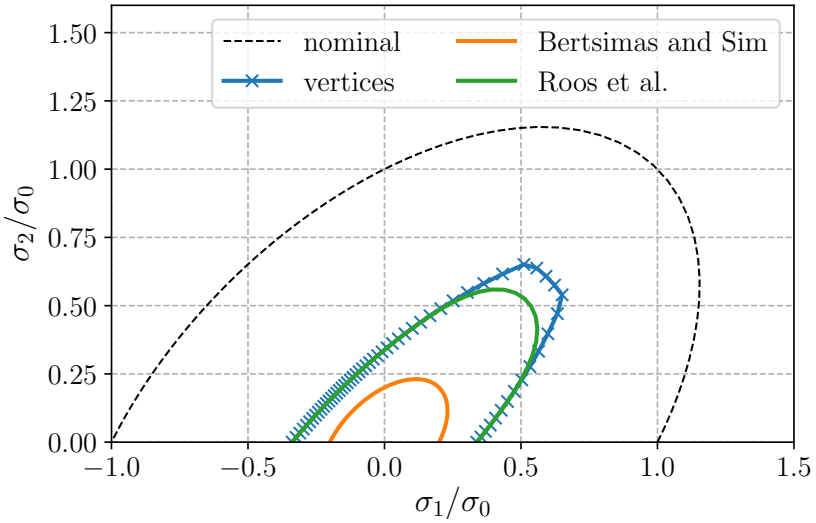

(b) $\mathcal{U}_\infty$ (L_∞-ball)

$\alpha = 0.40$

Outline

1. Limit analysis theory: nominal and uncertain cases
2. Static counterpart and tractable strength condition reformulations
3. **Affinely adjustable robust counterpart**
4. Uncertain loadings

Affinely adjustable robust counterpart

Strength uncertainty only:

$$\min_{\boldsymbol{\zeta}\in\mathcal{U}} \max_{\lambda,\boldsymbol{\sigma}} \quad \lambda$$

$$\text{s.t.} \quad \begin{aligned} &\boldsymbol{H}\boldsymbol{\sigma} + \lambda \boldsymbol{F} = 0 \\ &g_{G(\boldsymbol{\zeta})}(\boldsymbol{\sigma}_k) \leq 1 \qquad \forall k = 1, \ldots, N \end{aligned}$$

Affinely adjustable robust counterpart

Strength uncertainty only:

$$\min_{\boldsymbol{\zeta}\in\mathcal{U}} \max_{\lambda,\boldsymbol{\sigma}} \quad \lambda$$
$$\text{s.t.} \quad \begin{aligned} &\boldsymbol{H}\boldsymbol{\sigma} + \lambda \boldsymbol{F} = 0 \\ &g_{G(\boldsymbol{\zeta})}(\boldsymbol{\sigma}_k) \leq 1 \qquad \forall k = 1, \dots, N \end{aligned}$$

we use **affine decision rules**:

$$\boldsymbol{\sigma}(\boldsymbol{\zeta}) = \boldsymbol{\sigma}_0 + \sum_{j=1}^{m} \boldsymbol{\sigma}_j \zeta_j \quad ; \quad \lambda(\boldsymbol{\zeta}) = \lambda_0 + \sum_{j=1}^{m} \lambda_j \zeta_j$$

Affinely adjustable robust counterpart

Strength uncertainty only:

$$\min_{\boldsymbol{\zeta}\in\mathcal{U}} \max_{\lambda,\boldsymbol{\sigma}} \quad \lambda$$
$$\text{s.t.} \quad \begin{aligned} &\boldsymbol{H}\boldsymbol{\sigma} + \lambda \boldsymbol{F} = 0 \\ &g_{G(\boldsymbol{\zeta})}(\boldsymbol{\sigma}_k) \leq 1 \qquad \forall k = 1, \dots, N \end{aligned}$$

we use **affine decision rules**:

$$\boldsymbol{\sigma}(\boldsymbol{\zeta}) = \boldsymbol{\sigma}_0 + \sum_{j=1}^{m} \boldsymbol{\sigma}_j \zeta_j \quad ; \quad \lambda(\boldsymbol{\zeta}) = \lambda_0 + \sum_{j=1}^{m} \lambda_j \zeta_j$$

so that

$$\lambda_{\text{AARC}} = \max_{\lambda_i,\boldsymbol{\sigma}_i} \quad \lambda_0 + \sum_{j=1}^{m} \lambda_j \zeta_j$$
$$\text{s.t. } \forall \boldsymbol{\zeta} \in \mathcal{U} \quad \begin{aligned} &\boldsymbol{H}(\boldsymbol{\sigma}_0 + \sum_{j=1}^{m} \boldsymbol{\sigma}_j \zeta_j) + (\lambda_0 + \sum_{j=1}^{m} \lambda_j \zeta_j)\boldsymbol{F} = 0 \\ &g_{G(\boldsymbol{\zeta})}(\boldsymbol{\sigma}_{0k} + \sum_{j=1}^{m} \boldsymbol{\sigma}_{jk} \zeta_j) \leq 1 \qquad \forall k = 1, \dots, N \end{aligned}$$

AARC formulation (homothetic strength uncertainty)

Assume the following **homothetic** strength uncertainty: $G(\boldsymbol{\zeta}) = (1 - \boldsymbol{b}^{\mathsf{T}}\boldsymbol{\zeta})G_0$

$$\lambda_{\text{AARC}} = \max_{\lambda_i, \boldsymbol{\sigma}_i} \quad \lambda_0 + \sum_{j=1}^{m} \lambda_j \zeta_j$$

$$\text{s.t. } \forall \boldsymbol{\zeta} \in \mathcal{U} \quad \begin{aligned} & \boldsymbol{H}(\boldsymbol{\sigma}_0 + \sum_{j=1}^{m} \boldsymbol{\sigma}_j \zeta_j) + (\lambda_0 + \sum_{j=1}^{m} \lambda_j \zeta_j)\boldsymbol{F} = 0 \\ & g_0(\boldsymbol{\sigma}_{0k} + \sum_{j=1}^{m} \boldsymbol{\sigma}_{jk} \zeta_j) \leq 1 - \boldsymbol{b}^{\mathsf{T}}\boldsymbol{\zeta} \qquad \forall k = 1, \ldots, N \end{aligned}$$

AARC formulation (homothetic strength uncertainty)

Assume the following **homothetic** strength uncertainty: $G(\boldsymbol{\zeta}) = (1 - \boldsymbol{b}^{\mathsf{T}}\boldsymbol{\zeta})G_0$

$$\lambda_{\text{AARC}} = \max_{\overline{\lambda},\lambda_i,\boldsymbol{\sigma}_i} \quad \overline{\lambda}$$

$$\boldsymbol{H}(\boldsymbol{\sigma}_0 + \sum_{j=1}^{m} \boldsymbol{\sigma}_j \zeta_j) + (\lambda_0 + \sum_{j=1}^{m} \lambda_j \zeta_j)\boldsymbol{F} = 0$$

$$\text{s.t. } \forall \boldsymbol{\zeta} \in \mathcal{U} \qquad g_0(\boldsymbol{\sigma}_{0k} + \sum_{j=1}^{m} \boldsymbol{\sigma}_{jk}\zeta_j) \leq 1 - \boldsymbol{b}^{\mathsf{T}}\boldsymbol{\zeta} \qquad \forall k = 1, \ldots, N$$

$$\overline{\lambda} \leq \lambda_0 + \sum_{j=1}^{m} \lambda_j \zeta_j$$

AARC formulation (homothetic strength uncertainty)

Assume the following **homothetic** strength uncertainty: $G(\boldsymbol{\zeta}) = (1 - \boldsymbol{b}^{\mathsf{T}}\boldsymbol{\zeta})G_0$

$$\lambda_{\text{AARC}} = \max_{\overline{\lambda}, \lambda_i, \boldsymbol{\sigma}_i} \quad \overline{\lambda}$$

$$\text{s.t. } \forall \boldsymbol{\zeta} \in \mathcal{U} \quad \begin{aligned} & \boldsymbol{H}\boldsymbol{\sigma}_i + \lambda_i \boldsymbol{F} = 0 && \forall i = 1, \dots, m \\ & g_0(\boldsymbol{\sigma}_{0k} + \sum_{j=1}^{m} \boldsymbol{\sigma}_{jk}\zeta_j) \leq 1 - \boldsymbol{b}^{\mathsf{T}}\boldsymbol{\zeta} && \forall k = 1, \dots, N \\ & \overline{\lambda} \leq \lambda_0 + \sum_{j=1}^{m} \lambda_j \zeta_j \end{aligned}$$

AARC formulation (homothetic strength uncertainty)

Assume the following **homothetic** strength uncertainty: $G(\boldsymbol{\zeta}) = (1 - \boldsymbol{b}^\mathsf{T}\boldsymbol{\zeta})G_0$

$$
\begin{aligned}
\lambda_{\mathsf{AARC}} = \max_{\overline{\lambda},\lambda_i,\boldsymbol{\sigma}_i} \quad & \overline{\lambda} \\
& \boldsymbol{H}\boldsymbol{\sigma}_i + \lambda_i \boldsymbol{F} = 0 && \forall i = 1,\dots,m \\
\text{s.t. } \forall \boldsymbol{\zeta} \in \mathcal{U} \quad & g_0(\boldsymbol{\sigma}_{0k} + \sum_{j=1}^{m} \boldsymbol{\sigma}_{jk}\zeta_j) \leq 1 - \boldsymbol{b}^\mathsf{T}\boldsymbol{\zeta} && \forall k = 1,\dots,N \\
& \overline{\lambda} \leq \lambda_0 - \| - \Lambda\|_{*,\mathcal{U}}
\end{aligned}
$$

AARC formulation (homothetic strength uncertainty)

Assume the following **homothetic** strength uncertainty: $G(\boldsymbol{\zeta}) = (1 - \boldsymbol{b}^\mathsf{T}\boldsymbol{\zeta})G_0$

$$\begin{aligned}
\lambda_{\text{AARC}} = \max_{\overline{\lambda},\lambda_i,\boldsymbol{\sigma}_i} \quad & \overline{\lambda} \\
& \boldsymbol{H}\boldsymbol{\sigma}_i + \lambda_i \boldsymbol{F} = 0 && \forall i = 1,\dots,m \\
\text{s.t. } \forall \boldsymbol{\zeta} \in \mathcal{U} \quad & g_0(\boldsymbol{\sigma}_{0k} + \sum_{j=1}^{m} \boldsymbol{\sigma}_{jk}\zeta_j) \leq 1 - \boldsymbol{b}^\mathsf{T}\boldsymbol{\zeta} && \forall k = 1,\dots,N \\
& \overline{\lambda} \leq \lambda_0 - \| - \Lambda\|_{*,\mathcal{U}}
\end{aligned}$$

The strength condition is of the form:

$$g(\boldsymbol{\sigma} + \boldsymbol{\Sigma}\boldsymbol{\zeta}) \leq 1 - \boldsymbol{b}^\mathsf{T}\boldsymbol{\zeta}, \quad \forall \boldsymbol{\zeta} \in \mathcal{U}$$

$\Rightarrow$ can use appproximations (2)-(3)

Example : loss of structural components

A multifiber beam model under applied bending moment

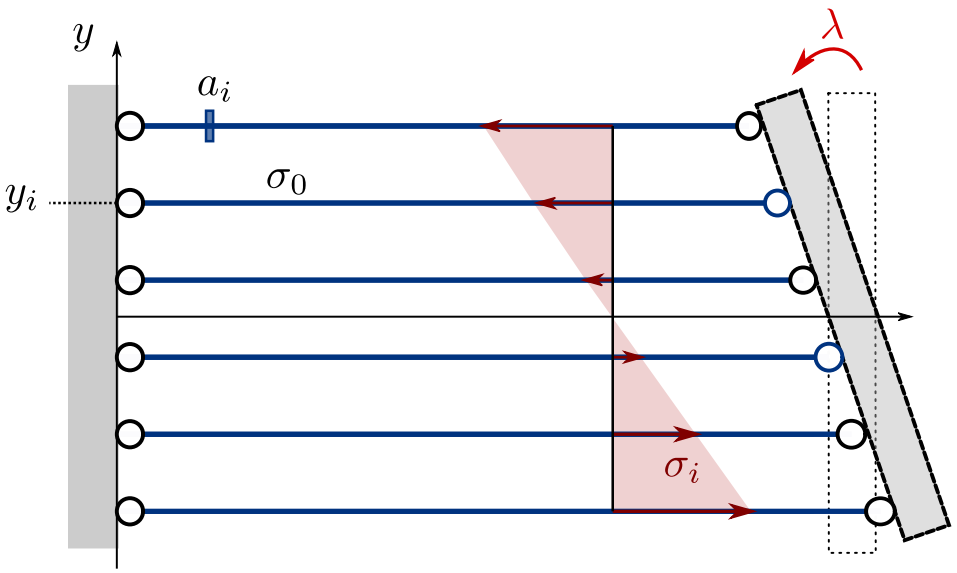

a_i fiber cross-section; y_i vertical position; σ_i fiber stress; σ_0 nominal strength

Example : loss of structural components

A multifiber beam model under applied bending moment

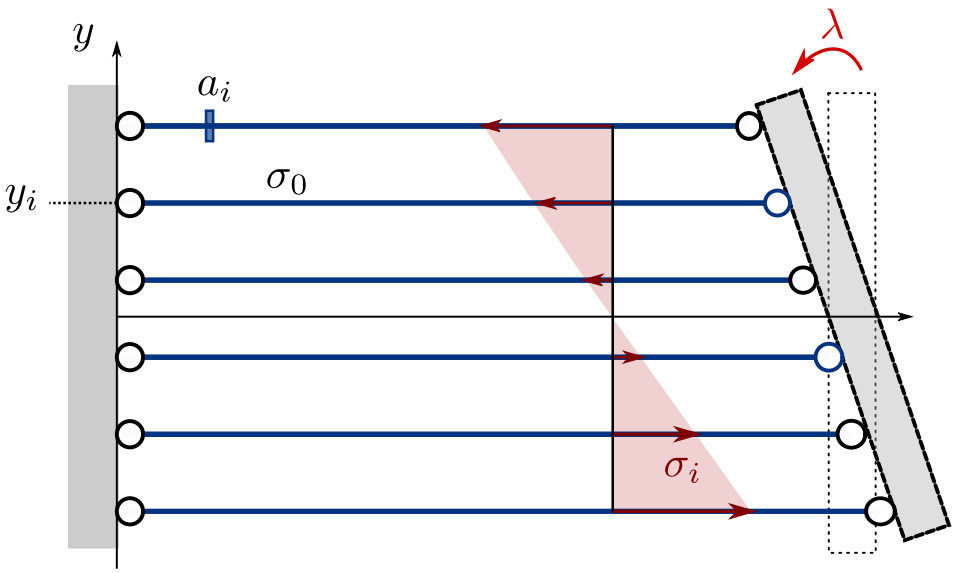

a_i fiber cross-section; y_i vertical position; σ_i fiber stress; σ_0 nominal strength

Nominal case:

$$\begin{aligned} \max_{\lambda,(\sigma_i)} \quad & \lambda \\ \text{s.t.} \quad & \sum_{i=1}^{n} -y_i a_i \sigma_i = \lambda \\ & |\sigma_i| \leq \sigma_0 \quad \forall i = 1, \ldots, n \end{aligned}$$

Example : loss of structural components

Uncertain case: each fiber has a strength which can vary between σ_0 and $(1-\eta)\sigma_0$, η maximum degradation level

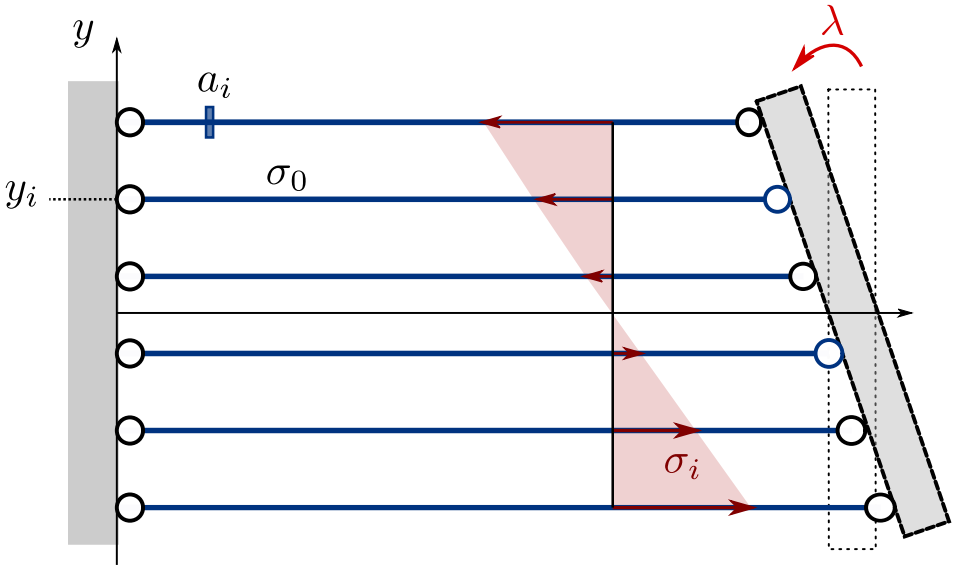

Example : loss of structural components

Uncertain case: each fiber has a strength which can vary between σ_0 and $(1-\eta)\sigma_0$, η maximum degradation level

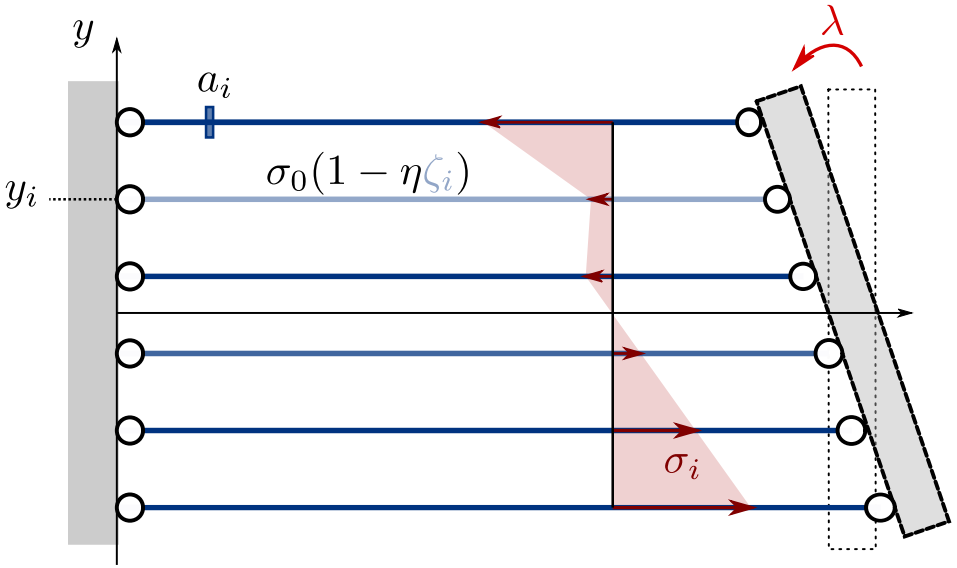

$$|\sigma_i| \leq (1-\eta\zeta_i)\sigma_0$$

Example : loss of structural components

Uncertain case: each fiber has a strength which can vary between σ_0 and $(1-\eta)\sigma_0$, η maximum degradation level

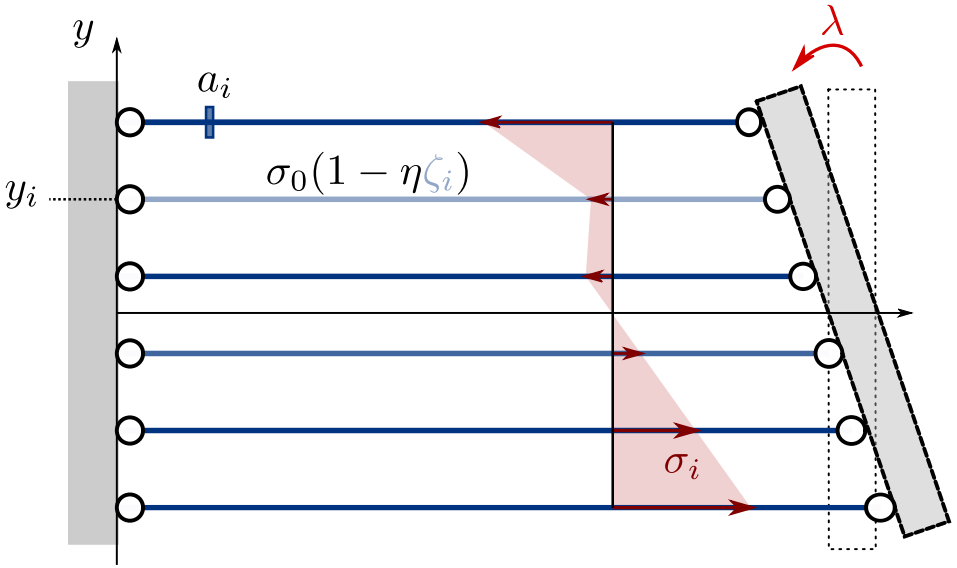

$$|\sigma_i| \leq (1-\eta\zeta_i)\sigma_0$$

We allow only Γ fibers out of n to reach their maximum degradation level using a **budget uncertainty** set

$$\mathcal{U}^+(\Gamma) = \left\{ \zeta \text{ s.t. } 0 \leq \zeta_i \leq 1 \; \forall i = 1, \ldots, n \text{ and } \sum_{i=1}^{n} \zeta_i \leq \Gamma \right\}$$

AARC formulation

Static decision rules are way **too conservative** in this case
$|\sigma_i| \leq (1 - \eta\zeta_i)\sigma_0 \quad \forall \boldsymbol{\zeta} \in \mathcal{U}_{\text{budget}}(\Gamma)$ treated as a box-uncertainty, **ignores** the budget constraint

AARC formulation

Static decision rules are way **too conservative** in this case
$|\sigma_i| \leq (1 - \eta\zeta_i)\sigma_0 \quad \forall \boldsymbol{\zeta} \in \mathcal{U}_{\text{budget}}(\Gamma)$ treated as a box-uncertainty, **ignores** the budget constraint

AARC formulation with $\boldsymbol{\sigma}(\boldsymbol{\zeta}) = \boldsymbol{\sigma} + \boldsymbol{\Sigma}\boldsymbol{\zeta}$, $\lambda(\boldsymbol{\zeta}) = \lambda + \Lambda^{\mathsf{T}}\boldsymbol{\zeta}$

$$
\begin{aligned}
\lambda_{\text{AARC}} = \max_{\bar{\lambda},\lambda,\Lambda,\boldsymbol{\sigma},\boldsymbol{\Sigma}} \quad & \bar{\lambda} \\
\text{s.t.} \quad & \sum_{i=1}^{n} -y_i a_i \sigma_i = \lambda \\
& \sum_{i=1}^{n} -y_i a_i \Sigma_{ij} = \Lambda_j && \forall j = 1, \dots, n \\
& \sigma_i + \|(\boldsymbol{\Sigma}^{\mathsf{T}} + \eta\sigma_0 \boldsymbol{I})\boldsymbol{e}_i\|_* \leq \sigma_0 && \forall i = 1, \dots, n \\
& -\sigma_i + \|(-\boldsymbol{\Sigma}^{\mathsf{T}} + \eta\sigma_0 \boldsymbol{I})\boldsymbol{e}_i\|_* \leq \sigma_0 && \forall i = 1, \dots, n \\
& \bar{\lambda} + \|-\boldsymbol{\Lambda}\|_* \leq \lambda
\end{aligned}
\tag{4}
$$

LP problem solved using `cvxpy`

Results

$n = 4$ fibers, $a_i = 1/n$, comparison against 100 samples projected onto $\mathcal{U}^+_{\text{budget}}(\Gamma)$
$\eta = 0.9$

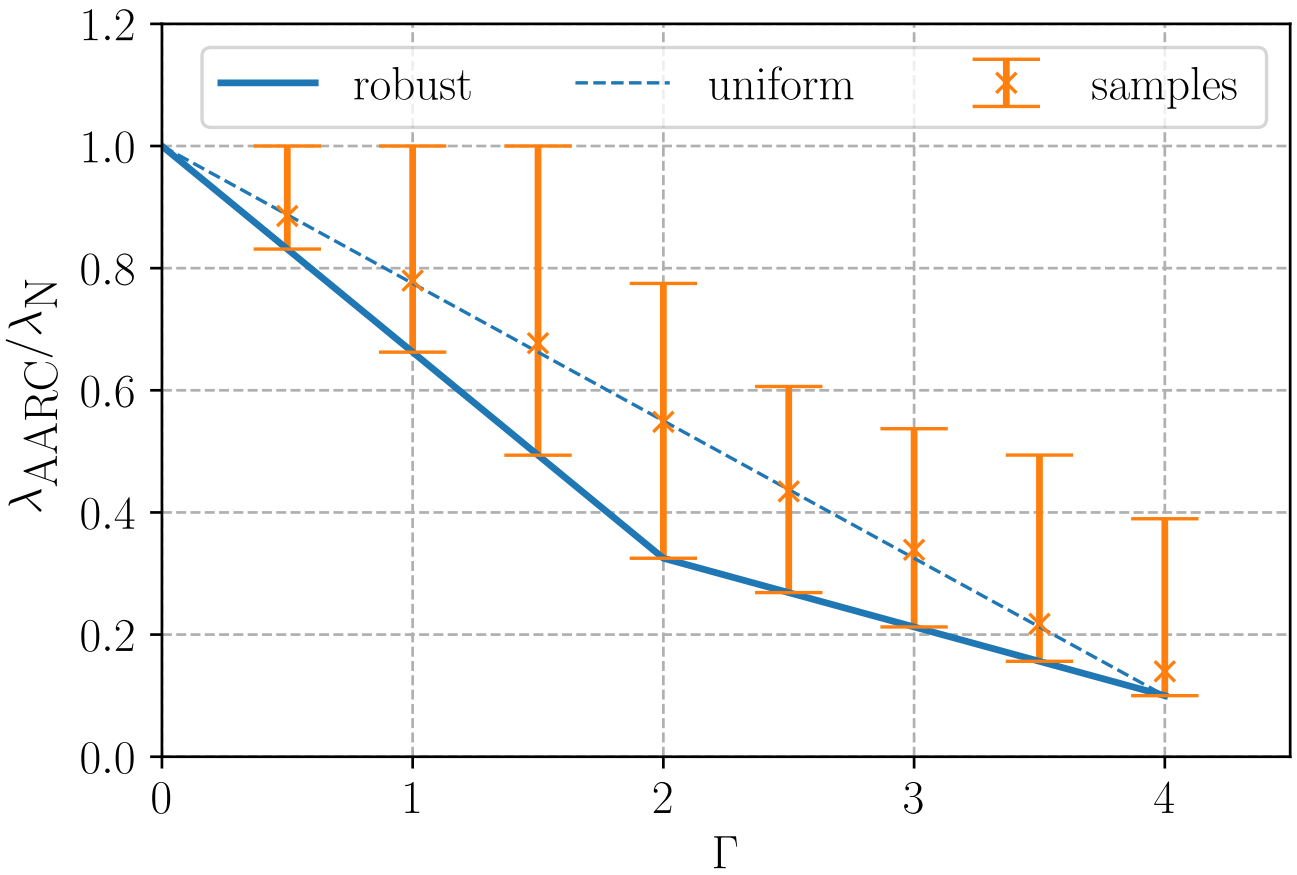

uniform = box-uncertainty with size $\Gamma/n \Rightarrow$ each fiber has the same strength $\sigma_0(1 - \eta\frac{\Gamma}{n})$

Results

$n = 100$ fibers, $a_i = 1/n$, comparison against 100 samples projected onto $\mathcal{U}^{+}_{\text{budget}}(\Gamma)$
$\eta = 0.9$

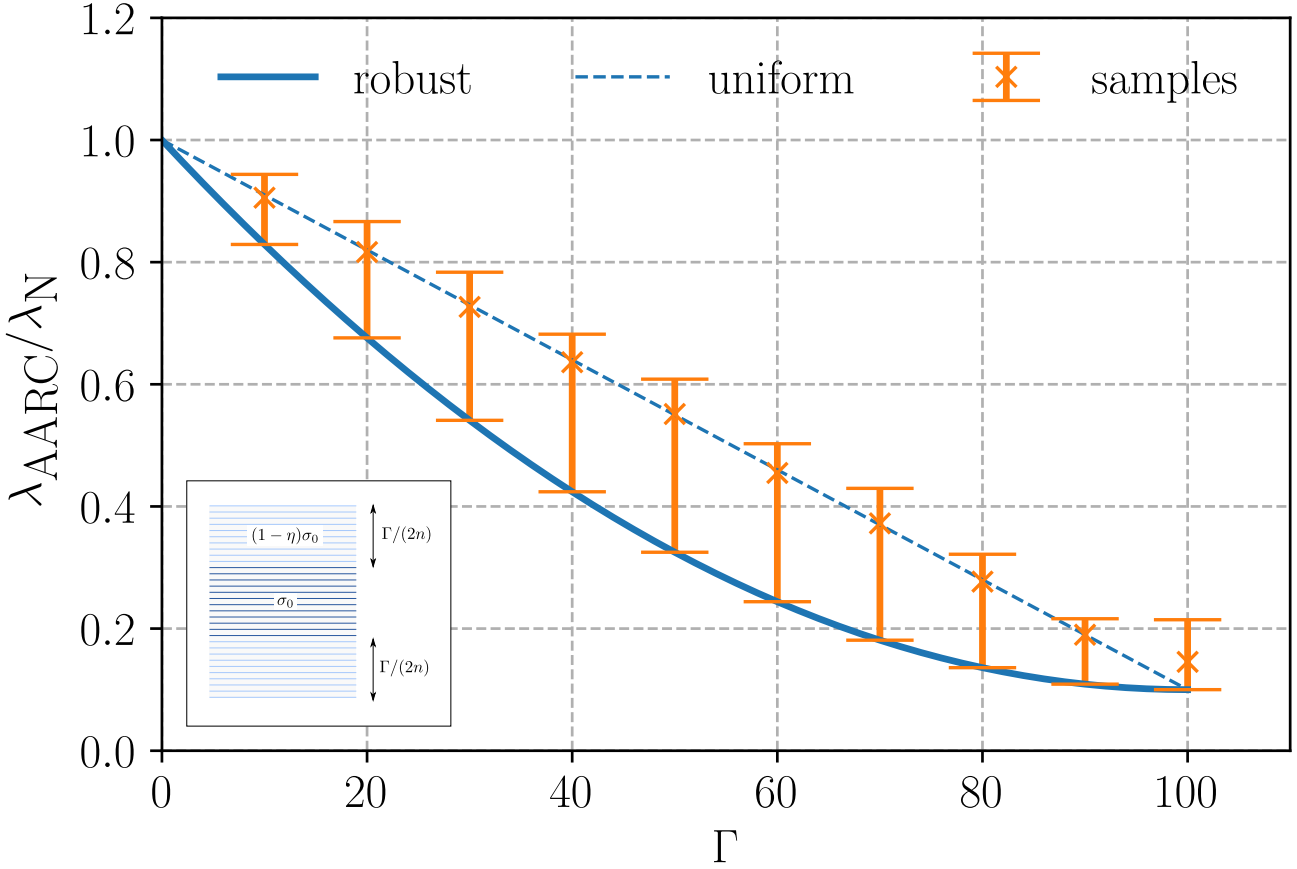

uniform = box-uncertainty with size $\Gamma/n \Rightarrow$ each fiber has the same strength $\sigma_0(1 - \eta\frac{\Gamma}{n})$

Affine decision rules are not always exact

We now add an additional constraint (zero normal force): $\sum_{i=1}^{n} a_i \sigma_i = 0$

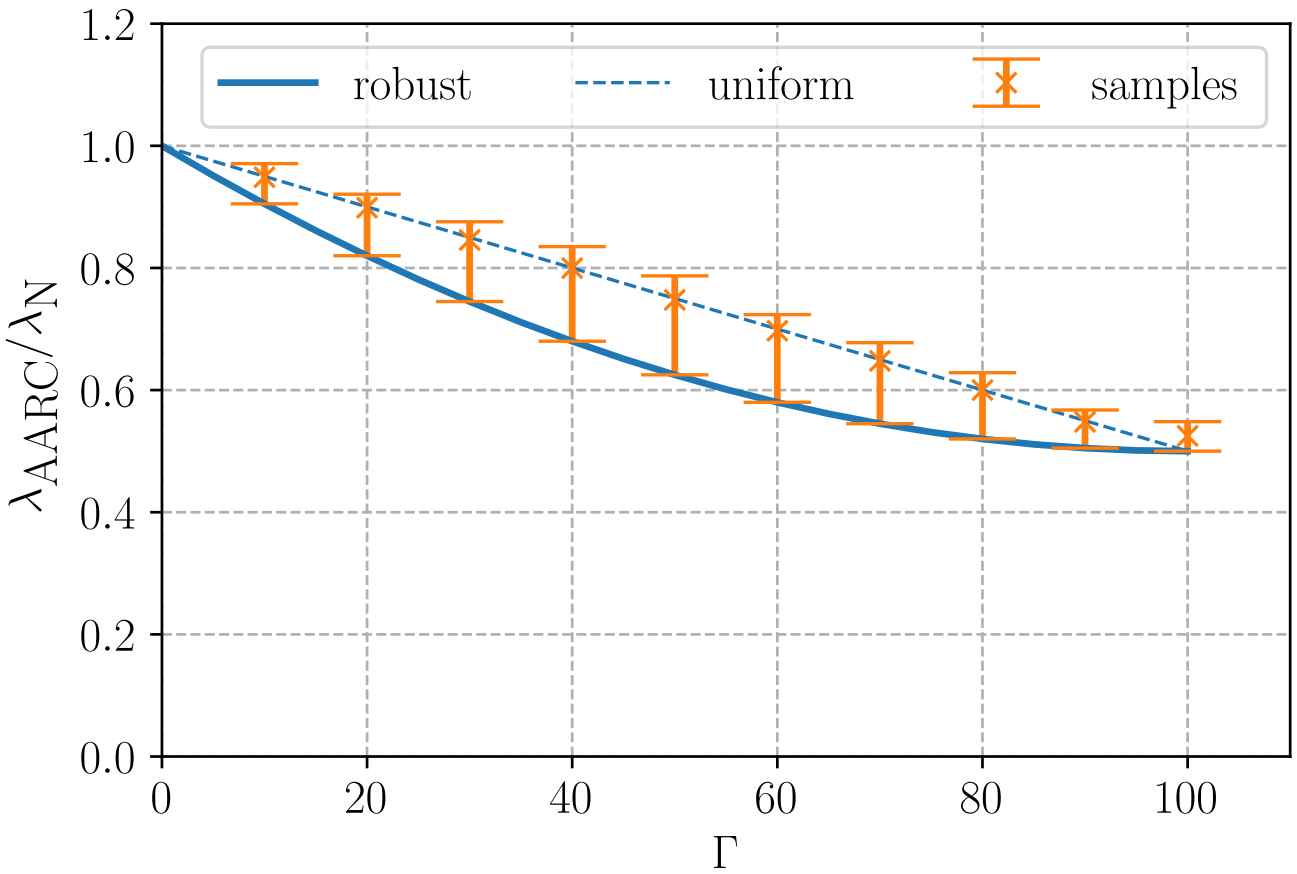

$\eta = 0.5$

Affine decision rules are not always exact

We now add an additional constraint (zero normal force): $\sum_{i=1}^{n} a_i \sigma_i = 0$

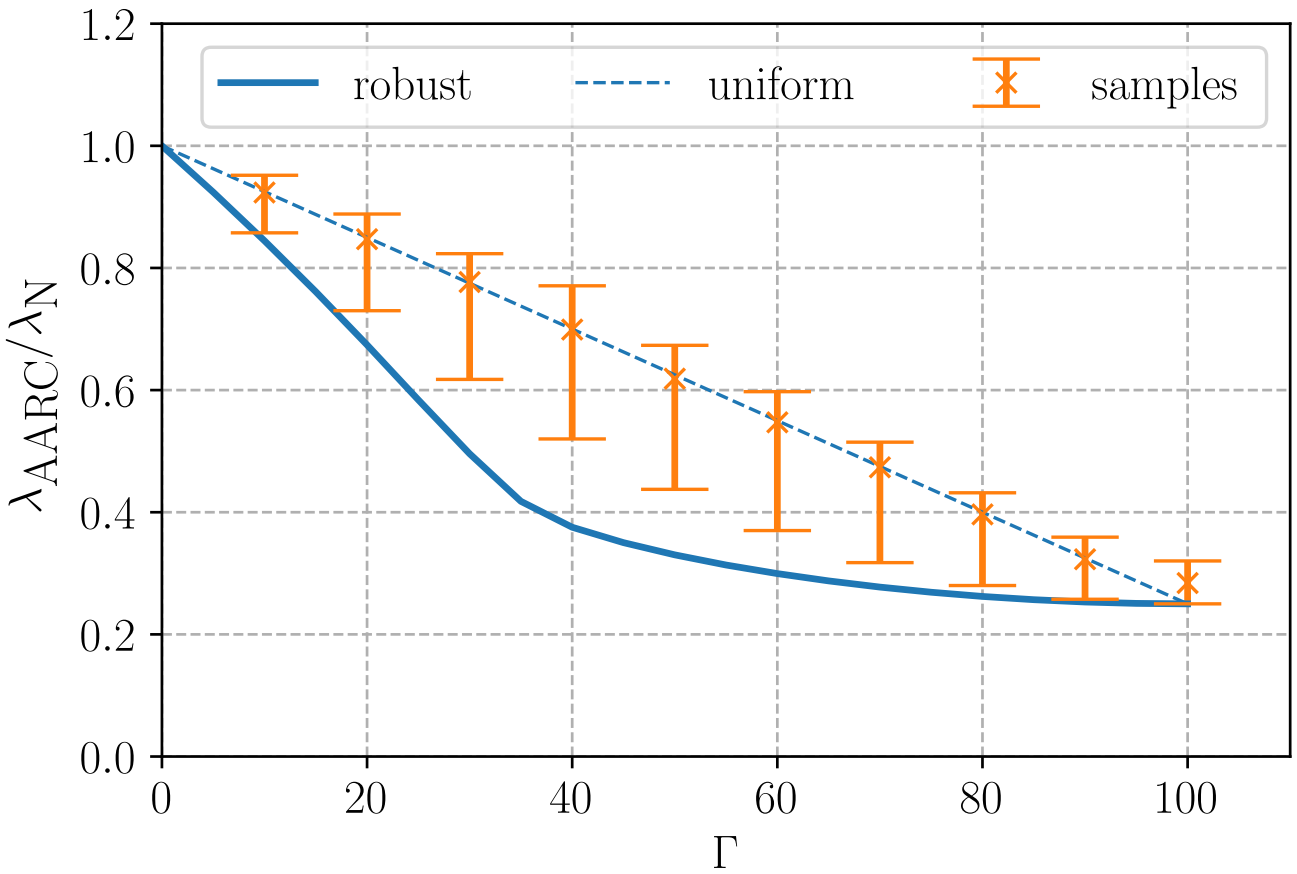

$\eta = 0.75$

Affine decision rules are not always exact

We now add an additional constraint (zero normal force): $\sum_{i=1}^{n} a_i \sigma_i = 0$

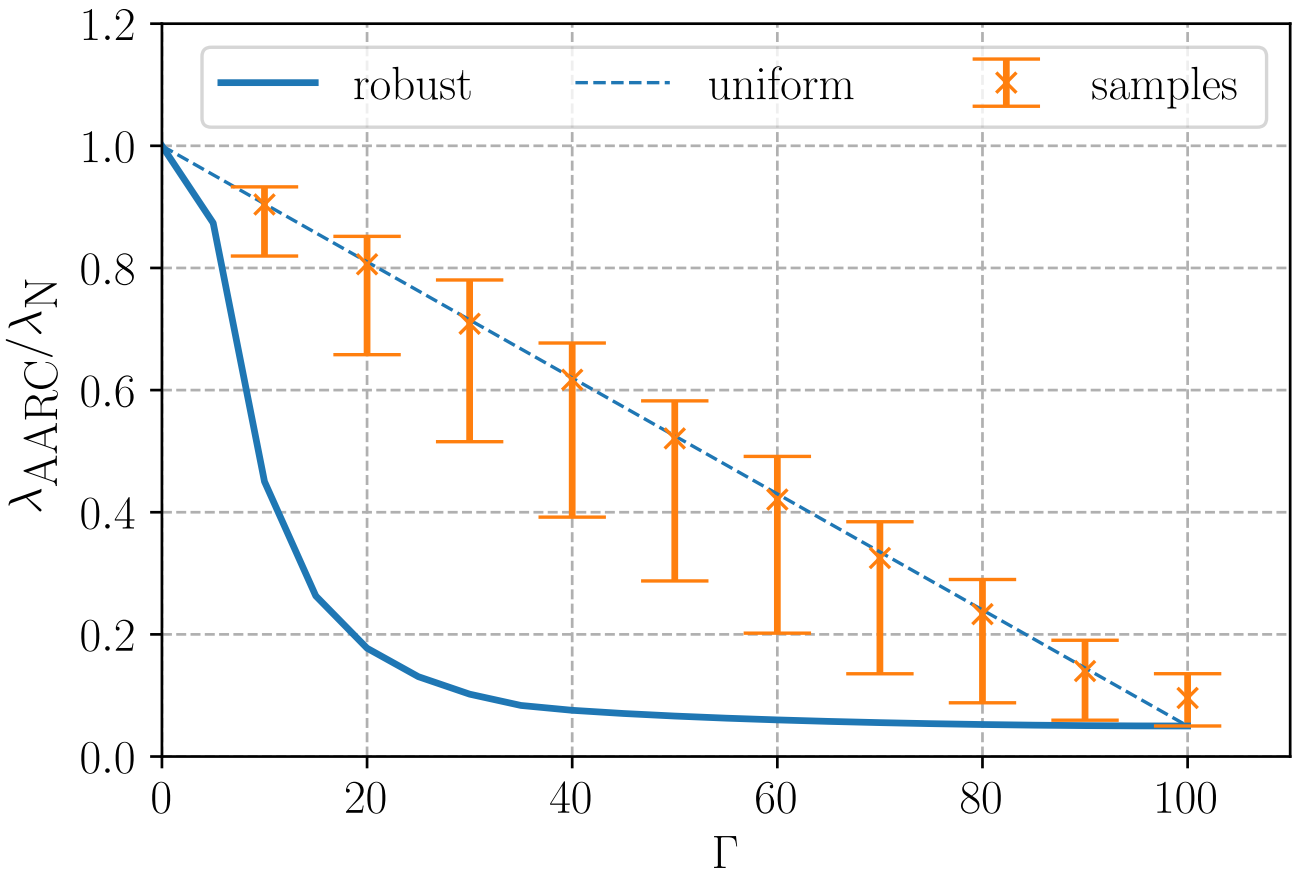

$\eta = 0.95$

Outline

1 Limit analysis theory: nominal and uncertain cases

2 Static counterpart and tractable strength condition reformulations

3 Affinely adjustable robust counterpart

4 **Uncertain loadings**

Uncertain loadings

Deterministic strength and reference loading + uncertain fixed loading

$$\min_{\boldsymbol{\zeta}\in\mathcal{U}} \max_{\lambda,\boldsymbol{\sigma}} \quad \lambda$$

$$\text{s.t.} \quad \begin{aligned} &\boldsymbol{H}\boldsymbol{\sigma} + \lambda \boldsymbol{F} + \sum_{j=1}^{m} \boldsymbol{F}_j \zeta_j = 0 \\ &g_G(\boldsymbol{\sigma}_k) \leq 1 \qquad \forall k = 1, \ldots, N \end{aligned}$$

Uncertain loadings

Deterministic strength and reference loading + uncertain fixed loading

$$\min_{\boldsymbol{\zeta}\in\mathcal{U}} \max_{\lambda,\boldsymbol{\sigma}} \quad \lambda$$

$$\text{s.t.} \quad \begin{aligned} &\boldsymbol{H}\boldsymbol{\sigma} + \lambda \boldsymbol{F} + \sum_{j=1}^{m} \boldsymbol{F}_j \zeta_j = 0 \\ &g_G(\boldsymbol{\sigma}_k) \leq 1 \qquad \forall k = 1, \dots, N \end{aligned}$$

AARC formulation:

$$\lambda_{\text{AARC}} = \max_{\overline{\lambda},\lambda_i,\boldsymbol{\sigma}_i} \quad \overline{\lambda}$$

$$\text{s.t.} \quad \begin{aligned} &\boldsymbol{H}\boldsymbol{\sigma}_0 + \lambda_0 \boldsymbol{F} = 0 \\ &\boldsymbol{H}\boldsymbol{\sigma}_j + \lambda_j \boldsymbol{F} + \boldsymbol{F}_j = 0 \\ &g_G(\boldsymbol{\sigma}_{0k} + \sum_{j=1}^{m} \boldsymbol{\sigma}_{jk}\zeta_j) \leq 1 \qquad \forall k = 1, \dots, N, \forall \boldsymbol{\zeta} \in \mathcal{U} \\ &\overline{\lambda} \leq \lambda_0 - \| - \Lambda \|_{*,\mathcal{U}} \end{aligned}$$

again we can use approximations (2)/(3) to have a safe tractable formulation

Particular case of box-uncertainty

[Roos et al. approximation] in the **box-uncertainty** case $\mathcal{U} = \mathcal{U}_\infty$:

$$g(\boldsymbol{\sigma} + \boldsymbol{\Sigma}\boldsymbol{\zeta}) \leq 1, \quad \forall \boldsymbol{\zeta} \in \mathcal{U}_\infty$$

is safely approximated by $\exists \boldsymbol{w} \in \mathbb{R}^m$, $\boldsymbol{W} \in \mathbb{R}^{d \times m}$ s.t.

$$\begin{cases} \displaystyle\sum_{j=1}^{m} w_j + g\left(\boldsymbol{\sigma} - \sum_{j=1}^{m} \boldsymbol{W}_j\right) \leq 1 \\ \max\{g(\boldsymbol{W}_j - \boldsymbol{\Sigma}_j); g(\boldsymbol{W}_j + \boldsymbol{\Sigma}_j)\} \leq w_j \quad \forall j = 1, \ldots, m \end{cases}$$

Example : limit analysis of a truss structure

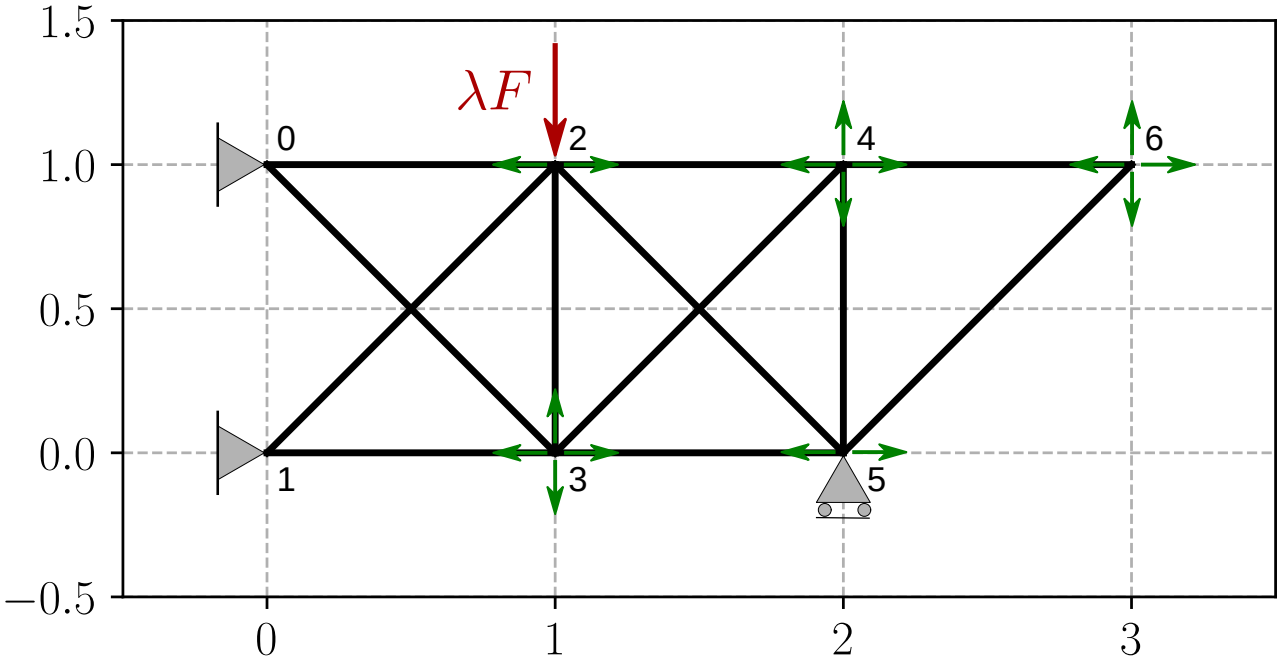

deterministic reference load

uncertain fixed loads : each component of amplitude $\pm\alpha\lambda_N F$ (box-uncertainty)

hinged members carrying only axial loads

Example : limit analysis of a truss structure

Nominal collapse state

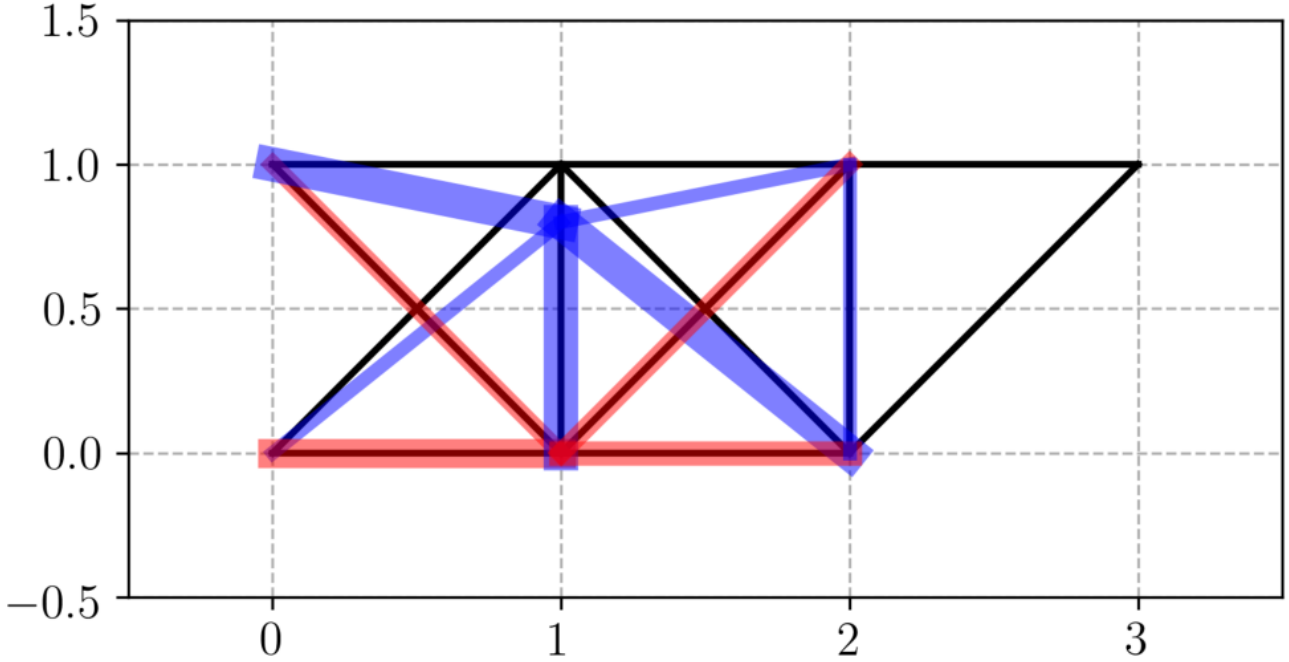

collapse mechanism and optimal stress field (**tension**/**compression**)

Uncertain case and AARC solution

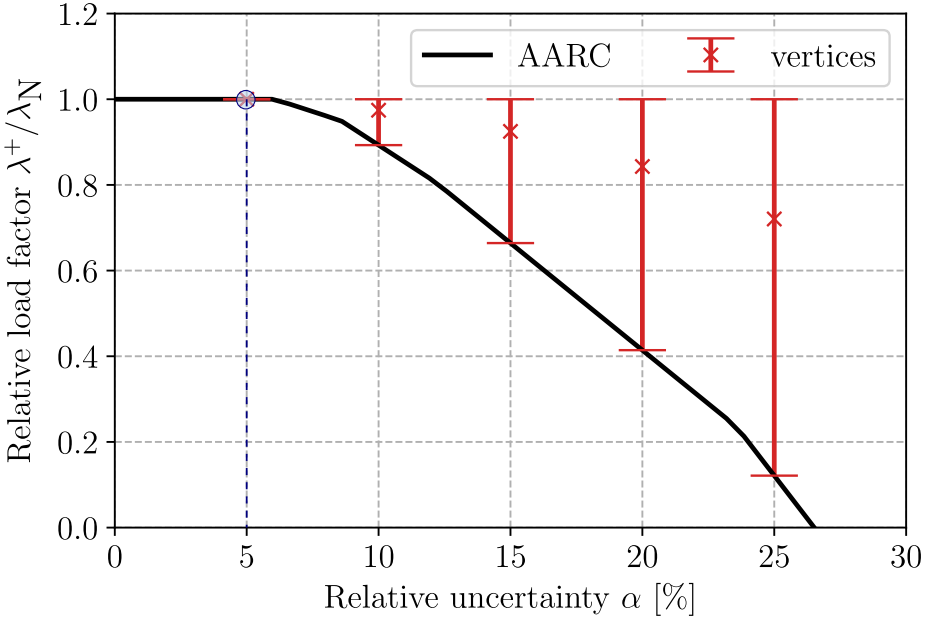

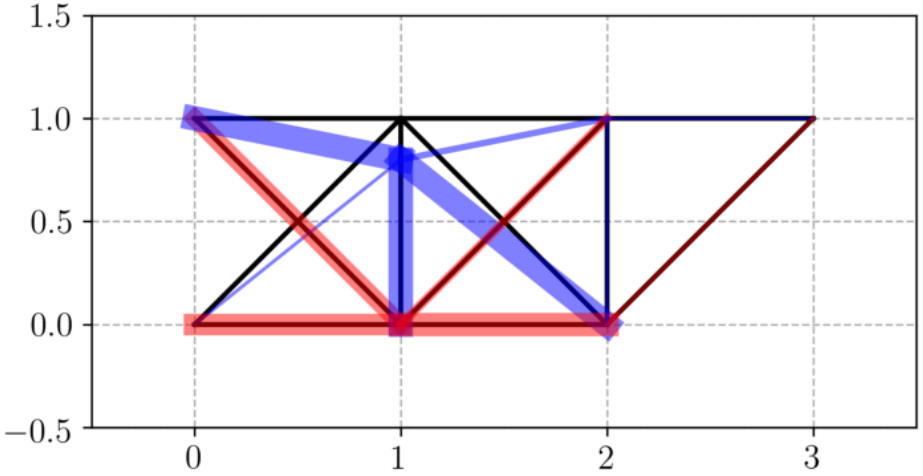

$\alpha = 5\%$

Uncertain case and AARC solution

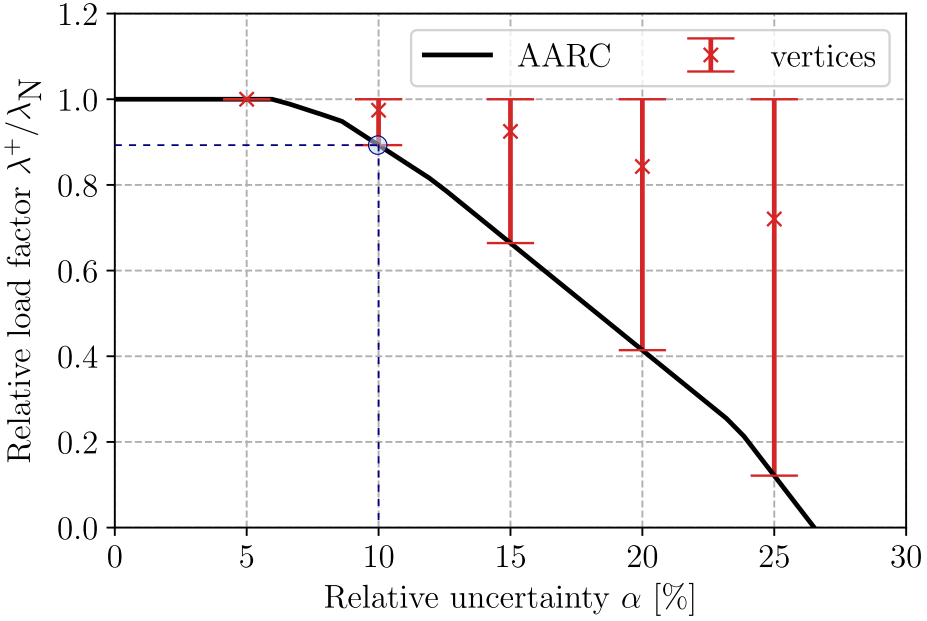

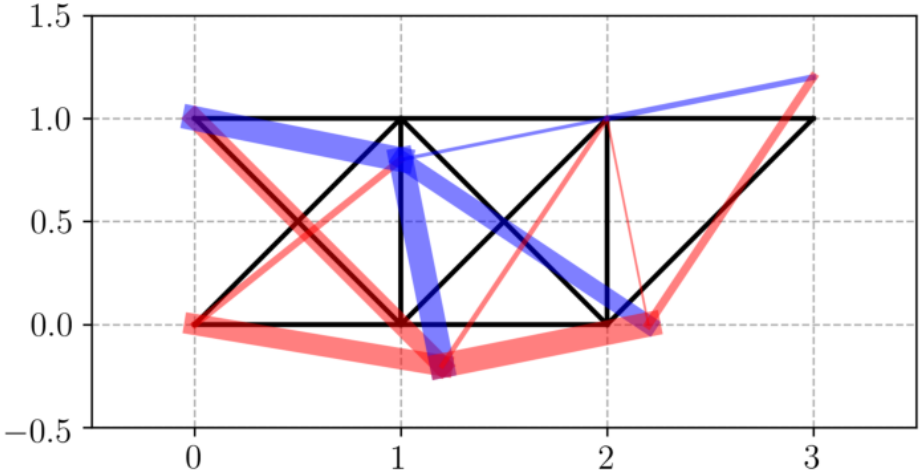

$\alpha = 10\%$

Uncertain case and AARC solution

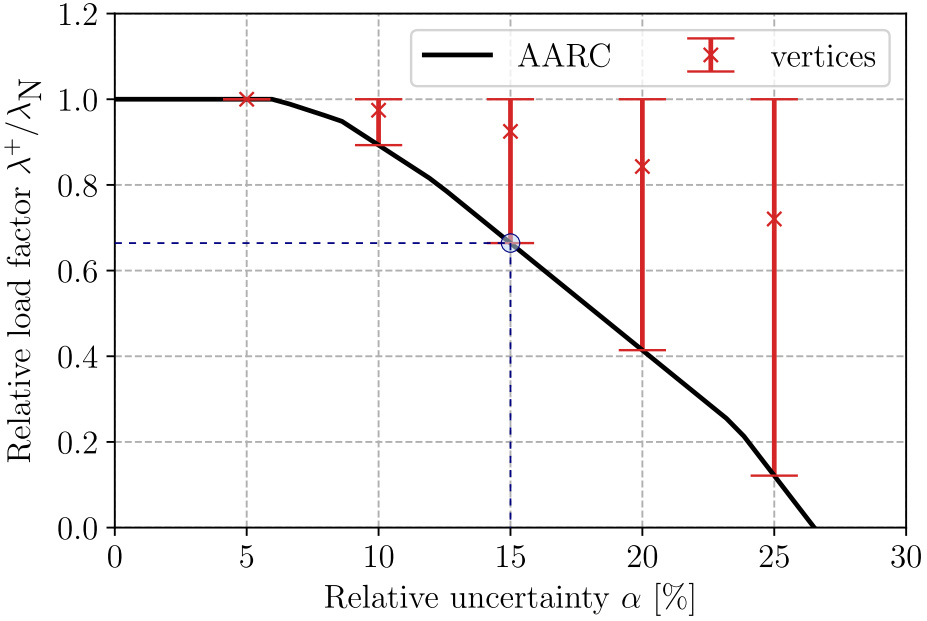

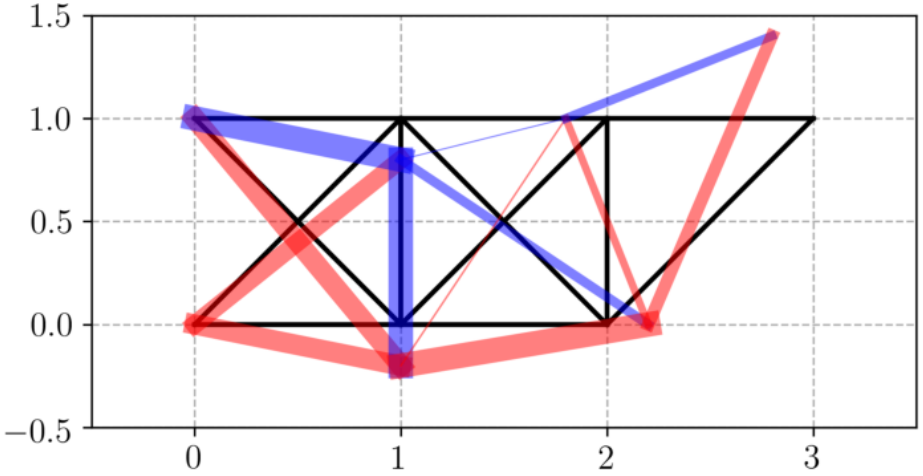

$\alpha = 15\%$

Uncertain case and AARC solution

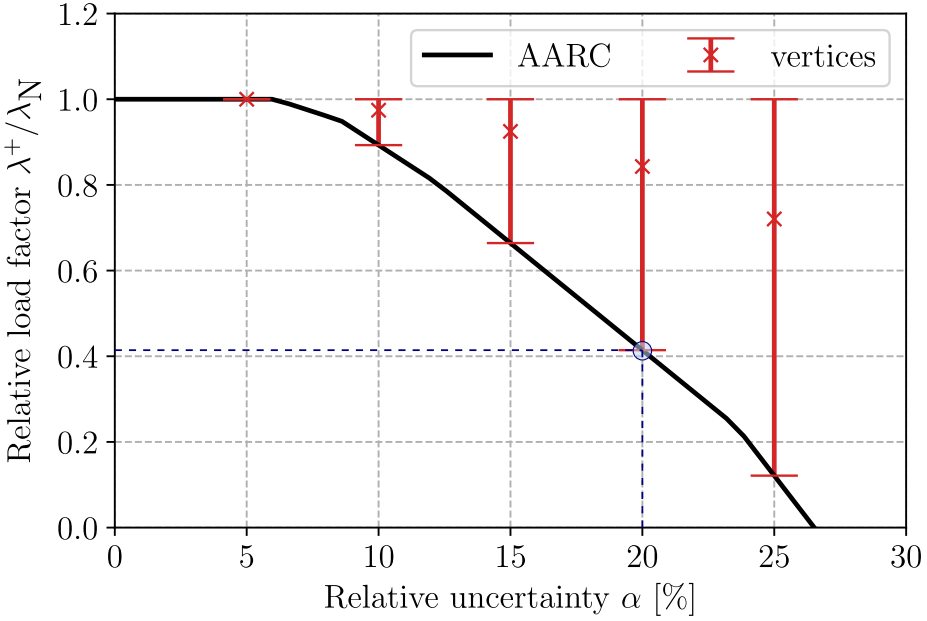

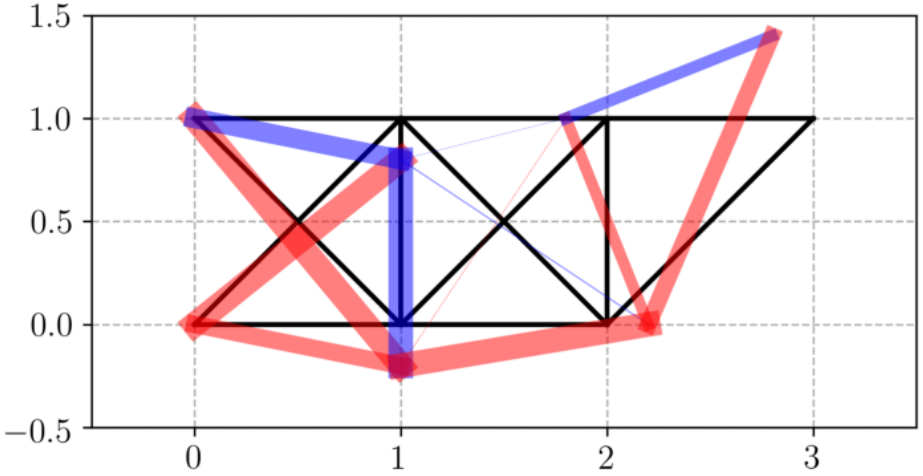

$\alpha = 20\%$

Uncertain case and AARC solution

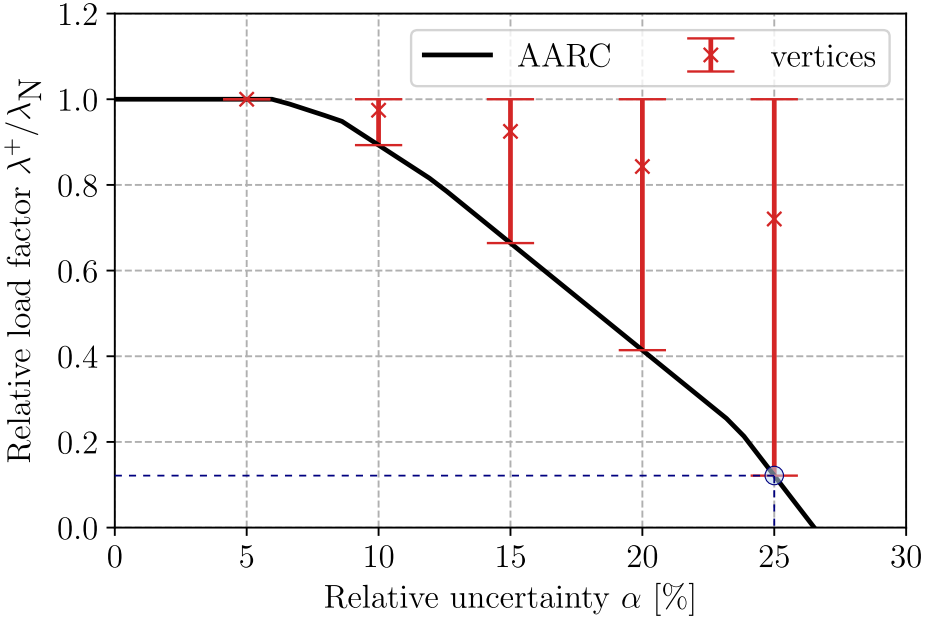

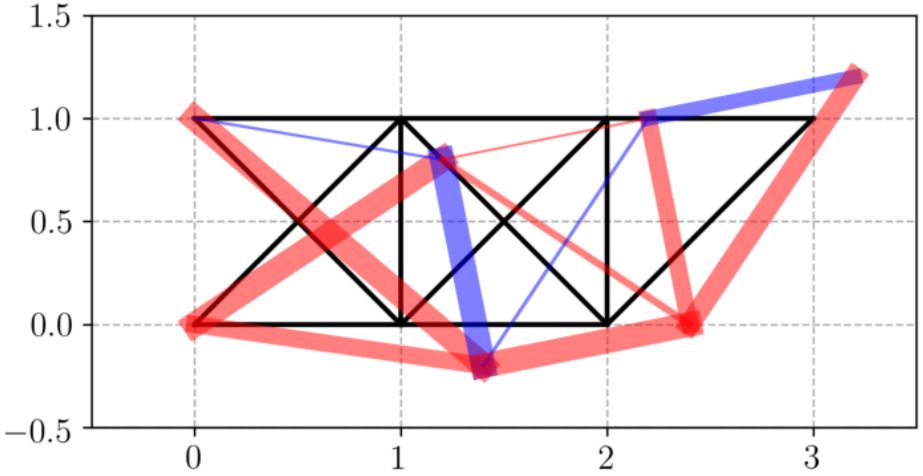

$\alpha = 25\%$

Conclusions and perspectives

Robust limit analysis theory

- RO concepts are applied to convex optimization problems of limit analysis
- often requires affine decision rules (e.g. load uncertainty)
- robust strength constraint need specific approximate reformulations
- resulting RC remains tractable and computationally efficient

Conclusions and perspectives

Robust limit analysis theory

- RO concepts are applied to convex optimization problems of limit analysis
- often requires affine decision rules (e.g. load uncertainty)
- robust strength constraint need specific approximate reformulations
- resulting RC remains tractable and computationally efficient

Perspectives

- 2D/3D computations
- dual formulation
- probabilistic guarantees ?
- non-linear decision rules ?

Conclusions and perspectives

Robust limit analysis theory

- RO concepts are applied to convex optimization problems of limit analysis
- often requires affine decision rules (e.g. load uncertainty)
- robust strength constraint need specific approximate reformulations
- resulting RC remains tractable and computationally efficient

Perspectives

- 2D/3D computations
- dual formulation
- probabilistic guarantees ?
- non-linear decision rules ?

Thank you for your attention !